GRAPE

Post-harvest Operations

INPhO - Post-harvest Compendium

Food and Agriculture Organization
of the United Nations

GRAPE: Post-harvest Operations

Authors: Fabio Mencarelli, Andrea Bellincontro – LAPO, Department of Food Science and Technology, University of Viterbo, Italy. Email: mencarel@unitus.it
Giancarlo DiRenzo – Technical Economic Department, University of Basilicata, Italy. E-mail: direnzo@unibas.it
Edited by: Danilo Mejía, PhD - Agricultural and Food Engineering Technologies Service (AGST)
Last reviewed: 13/11/2005

Contents

Preface

Grape is one of the most diffuse fruit in the world both as fresh fruit (table grape) and processed in wine, grape juice, molassa, and raisins. The reason to have these different processed products depends on the extreme perishability of the fruit. As fresh fruit, grapes are very delicate and the loss at harvest and during the distribution is very high. In a survey on postharvest losses on the New York and Chicago markets, Cappellini and Ceponis (1984) reported that on the retail the loss of grape Emperor and Thompson Seedless was respectively of 1.4 and 3.7 millions of pounds. The situation is not changed with the years and today table grapes is one the commodity with the higher loss in the retail step of the distribution channel, losses due mainly to shattering and grey mould. If the situation is so critical in term of losses in the Developed Countries, in the Developing Countries the losses are always higher because harvest and postharvest operations to protect grapes from mechanical damage are very poor or completely absent. In Developed Countries table grape is one of the fruit with the highest input of technology (cooling, sulfuration, packing, cold storage) and practices (hand labour). In Developing Countries the cost of labour is low but

the financial situation to afford the purchase of the equipments sometime is critical. Today, in the direction of market-oriented production even for poor countries, the need of knowledge of advanced technologies as well as the information about the Developed Countries requirements in term of trade quality and safety is very worthwhile.

1. Introduction

a) Taxonomy, cultivars

Grapes belong to the *Vitaceae* family. The genus *Vitis* is largely distributed between 25° and 50° N latitude in Europe, the Middle East, North America, and eastern Asia. Additionally, a few species of *Vitis* are found in the tropics – Central American countries, Caribbean, and northern South America. These are over 100 species in the literature, 65 of which are thought to be pure lines and another 44, probably interspecific hybrids. The genus *Vitis* is divided into 2 subgenera:

1. *Euvitis* - "True grapes"; characterized by elongated clusters of fruit with berries adhering to stems at maturity, forked tendrils, diaphragms in pith at nodes. Also called "bunch grapes" . Most of the species is in this subgenera.
2. *Muscadinia* - Muscadine grapes; characterized by small fruit clusters, thick-skinned fruit, berries that detach one-by-one as they mature, simple tendrils, and the lack of diaphragms in pith at nodes. There are only 2-3 species in this section.

b) Origin, history of cultivation

Figure 1. Table grape producing areas

1. *V. vinifera*. "Old world grape", "European grape". This is the major species of grape, accounting for >90% of world production. Probably native in the area near the Caspian sea, in Asia Minor. Seeds have been found in excavated dwellings of the Bronze-age in south-central Europe (3500 - 1000 BC). Egyptian hieroglyphics detail the culture of grapes in 2440 BC. The Phoenicians carried wine varieties to Greece, Rome, and southern France before 600 BC, and Romans spread the grape throughout Europe. Grapes moved to the far east via traders from Persia and India. Shiraz variety very famous for wine production gets the name from one the most important Iranian city where the grapes were found about 5000 years ago.

2. *V. labrusca*. (syn. *V. labruscana* Bailey). American bunch grape, Fox grape, Concord grape. Valuable in breeding; hybrids used in wine production or as phylloxera resistant rootstocks for vinifera grapes. Major use is for sweet grape juice (Welch's) and associated products - jelly, jam, preserves, some wine. This species is found growing wild from Maine to the South Carolina Piedmont, as far west as the Tennessee mountains. It is thought that Viking explorers, before Columbus' voyages, named the maritime provinces of Canada "Vinland" meaning "grape land" due to the abundance of wild grapes growing in the forests.
3. *V. rotundifolia*. Cultivated muscadine grapes charcaterised by fruity aroma, thick-skinned berries, in small clusters or borne singly, resistant to Pierce's disease and phylloxera. Native from Virginia in the north through central Florida, west to eastern Texas.

c) Botanical description

Plant: a liana or woody vine. Leaves are often large (8-10" in width) sometimes deeply lobed as in many *V. vinifera* cultivars, or rounded with entire or serrate margins. Tendrils occur opposite leaves at nodes.

Figure 2. Typical grapes leaves shape

Flower: Flowers are small (1/8 inch), indiscrete, 5-merous, borne in racemose panicles opposite leaves on current season's growth. The calyptra, or cap is the corolla, which abscises at the base of the flower and pops off at anthesis. Species in *Euvitis* may have more than 100 flowers per inflorescence, whereas muscadine grapes have only 10-30 flowers per cluster. Also, vinifera and concord grapes are perfect-flowered and self-fruitful, whereas some muscadines have only pistillate flowers.

Figure 3. Inflorescence (left) and young leaves with closed floral buds

Pollination: Most grapes are self-fruitful and do not require pollinizers; however, pistillate muscadines (e.g., 'Fry', 'Higgins', 'Jumbo') must be inter-planted with perfect-flowered

cultivars for fruit set. Since parthenocarpy doesn't exist, all grapes require pollination for fruit set. Even seedless cultivars like 'Thompson Seedless' are not parthenocarpic; rather, the embryos abort shortly after fruit set. This condition is called "Stenospermocarpy".
Fruit: Fruit are berries, with 2 to 4 seeds; ovaries contain 2 locules each with 2 ovules.Italian varieties and French-American hybrids may set 4-5 clusters of fruit per shoot, and require cluster thinning for development of quality and proper vine vigor. Fruit size and cluster length are increased through GA application on 'Thompson Seedless' and other table cultivars. GA is applied 10-15 ppm when 50% of flowers on 50% of clusters are in bloom, followed by 40 ppm sizing spray 1 (± 2) weeks later. This opens the cluster, prevents crushing of berries, and reduces disease.

Figure 4. Grapes bunches of red and white varieties

d) General Culture

Soils: Grapes are adapted to a wide variety of soil conditions, from high pH and salt, to acidic and clay. Rootstocks allow adaptation to various soil situations. In the case of wine production, deep, well-drained, light textured soils are preferable. Highly fertile soils are unsuited to high quality wine production. Irrigation is not always necessary for wine grapes, but is beneficial for table and raisin grapes where high yields are desired.
Climate: Vinifera grapes can be generally characterized as requiring a long growing season, relatively high summer temperatures, low humidity, a ripening season free of rainfall, and mild winter temperatures. All of these attributes are found in mediterranean climates. Concord and muscadine grapes are obviously adapted to humid, temperate climates, with muscadines requiring longer growing seasons and milder winters than concords. Cold hardiness is a major limiting factor for vinifera grapes. Damage to primary buds occurs at -18 to -23 °C, and trunks may be injured or killed below – 23°C. Labrusca grapes are more cold resistant than vinifera or French-American hybrids, but can be injuried between -23 and -29°C. Muscadine grapes are the least cold resistant, being killed below -18°C.. The number of days from bloom to maturity, or heat unit requirement increases as follows: Labrusca (least) < French-American hybrids < European < Muscadine. This generally corresponds to 150-200+ frost-free days, with 165 to 180 best for vinifera, or 2000 to 3500 heat units.Humidity is another limiting factor for vinifera grape culture, due to disease susceptibility. Grapes cannot tolerate high RH or rain during harvest. Muscadines, however,

grow much better in humid climates.Chilling requirement is highly variable among grape species; some grapes can be grown in the tropics.
Propagation: The most common method of grapes propagation is bench grafting, although rooted cuttings (where phylloxera is not a problem), T-budding, layering (difficult-to-root types like muscadine), and to a limited extent, tissue culture are used in various situations.
Rootstocks: *Vitis vinifera* was propagated on its own roots from the beginning of recorded history until about the 1870s. The grape phylloxera (*Dactylosphaera vitifolii*, Homoptera), also called the "grape root louse" (but is actually an aphid), was introduced into Europe from eastern North America in the 1860s, where it caused the most significant pest-related disaster in all of fruit culture. The search for resistant rootstocks led horticulturists to the native range of the phylloxera, eastern N. America, where various species of American grapes had coexisted with the pest for millennia, and thus were resistant to it. Most grape rootstocks used today are numbered clonal selections of hybrids of *V. riparia*, *V. rupestris*, and *V. berlandieri*.

e) Pruning and training systems

Numerous systems are used around the world to obtain the proper balance between grapevine vigor and fruiting. Table grapes are pruned to the Bilateral Cordon or the Double-T Cane system.
Cane. The Double-T cane pruning system is useful when growing table grapes because of the balance achieved between fruit and vegetation and because of bud count flexibility. Sun canes from renewal spur buds are both vigorous and fruitful from year to year. Vines can be pruned to 8 or 24 buds with only 2 canes, or to 16 or 32 buds on a 4 cane system. Since new canes are selected each year, long term loss from hail or freeze is reduced. If excess vigor is a problem, more buds are left on the vine. The total bud count per vine can be used to dramatically increase cluster and berry size. Large cluster varieties can be pruned to fewer buds per cane on mature vines, producing fruit far superior to that obtained on a bilateral cordon vine. All varieties can be cane pruned.
Bilateral Cordon. The Bilateral Cordon is the most common pruning system currently in use for wine grapes in Texas, and it will also work for table grapes. Vine vigor and production are well-balanced with 28 to 32 total buds on 14 spurs. The bilateral cordon is very difficult to train during the second and third years of vineyard establishment, but is extremely easy to prune thereafter. Hail and freeze damage to the horizontal cordons has caused some growers to shift to a cane system with temporary canes rather than permanent cordons.
The Bilateral Cordon system is well-designed for leaf pruning and for exact fungicide placement to control black rot and bunch rot. All varieties except Thompson Seedless can produce good crops using the bilateral cordon if over-cropping or excess vigor is not a problem.

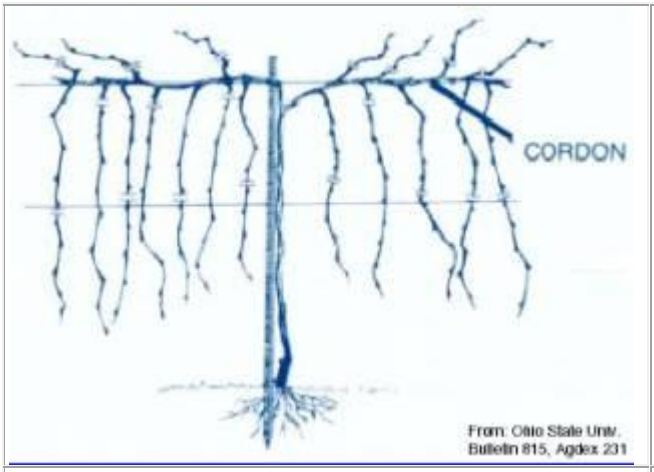	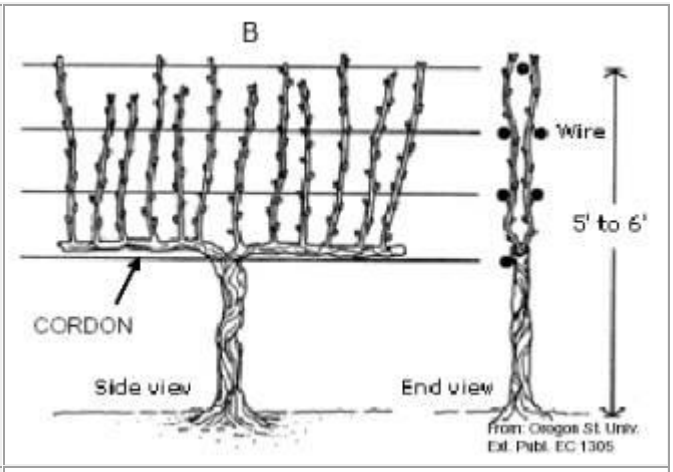
Suitable for cultivars with a trailing/drooping growth habit.	Suitable for cultivars with an upright to semi-upright growth habit.

Figure 5. Single Curtain Training Systems Curtain Training Systems Bi-lateral Cordon - lateral Cordon

Trellis. Table grapes need to be vigorous with the canopy positioned for maximum sunlight absorption. A Double-T Lyre trellis is best. The Double-T trellis should have 12-gauge wires spaced at 18 inches for the drip irrigation line, 42 inches for the main wire, two cane wires at 52 inches spaced 12 to 18 inches apart, and top wires at 66 inches spaced 24 to 36 inches apart. In situations where climate, soil and site may potentially reduce vine vigor, the Bilateral Cordon can be used. The cordon trellis has vertical wires at 18, 42, 52, and 66 inches.

Figure 6. Vineyard raised with the Cordon system

Italian situation. The only training system used in Italy for table grapes is that of `tendone', consisting of a continous overhead canopy under which the bunches are disposed; they receive some protection against wind and excessive light intensity and benefit from a microclimate characterized by moderate air temperature and diffuse solar radiation, thus favouring berry development and a more uniform ripening and skin colour. At present, the so called `puglia type' tendone is adopted. Basically, it consist of two pairs of canes (12-15 bud pruned) per vine having opposite direction, which are tied to a supporting wire (1.70-1.80 m in height); the shoots arising from canes are trained to grow over an higher wire (2.0 m in

height) and, when they are about 30-50 cm long, they are tied to still other wires, at the same height, forming the trellis of the tendone roof. This system allows a good separation between the vegetative and reproductive zones, the latter forms a continuous belt on each side of the vine `row'. In Sicily, the mixed pruning system with 2-3 spurs and 3-4 canes is used; in Apulia the mixed pruning system is used with cultivars such as `Victoria' or `Michele Palieri' which can have a low budburst at the first nodes. With cultivars showing a low budburst percentage and basal fruitfulness, such as `Centennial Seedless, as many as 20-25 buds per cane and 100 or more buds per vine are retained. Canopy management includes the thinning of sterile shoots when they have reached a length of 15-20 cm (all but the shoot destined to be the renewal cane) and, after berry set, the removal of leaves and laterals in the cluster zone, when shoots are tied to the trellis roof, the cluster are also accurately positioned under the canopy roof.

Figure 6. Italian pergulate known as `tendone'; the bunches are concentrate in the middle of the row.

f) Insects and diseases

The grape berry moth is a common pest. The small greenish larvae feed in the berries. Small, wedge-shaped jumping insects, called leafhoppers, feed on grape foliage. Severe damage reduces growth and interferes with fruit ripening. Mealy bugs and flea beetles also can cause injury. A fungus disease, called black rot, is widely prevalent and often damaging. The disease first attacks the foliage and later spreads to the fruit. Infected berries soon become blackened, shrivelled and worthless. Other fungus diseases are downy and powdery mildews. Fungal diseases usually grow in dense foliage that does not dry quickly. Appropriate pruning and training that encourages light penetration and air movement will help to eliminate or decrease the severity of these diseases. Crown gall, a bacterial disease, often occurs following an extremely cold winter. Galls or fleshy tumours appear on the lower trunk of injured vines. Infected canes should be pruned at the soil surface. New shoots originating from the base of the plant can be selected and trained to replace infected canes.

1.1 Economic and Social impact of the table grapes

Table grape is one of the fruit with the highest input of technologies but even with an intense hand labour activity and the price on the market is one of the higher in the fruit sector. The incidence of the handling cost over the final cost of the table grape leaving the packinghouse, is around 50% which means 20% more than most of fruits. Handling and packing (labour cost and packing materials) weight upon 25-30%; the cost od refrigerated storage condition engraves for 10% per month. Moreover there are some general costs of management around

5-8%. Shipping cost by truck from South Italy to North Europe is 10% of the final cost; oversea shipping to USA is 20%.
This high cost for market preparation is due to the labour cost for the operation of sorting and packing. In the area where the table grapes production is important, most of families bases the familiar annual income on the seasonal job of grapes harvest and annual job of grapes handling. Thus, from a viewpoint of employment, table grapes represent a real economic factor for the region. Moreover, the production of secondary products such as raisins, grape juice, molassa, and/or wine will increase the job potential as well as the economic return for the family. In fact the production of raisins in hot area is a very easy and sustainable technique which every one can carry out at home level. In Lebanon at this level even the molassa production is always common as the result of the grape juice heating and concentration. One farm family can produce table grapes for selling, raisins for selling and home consume without any problem of storability, grape juice and molassa for home use, the latter as substitute of sugar, and finally can produce wine in the easiest way.

1.2 World Table Grape Situation and Outlook

United States total fresh market grape production in 2001 is about unchanged from a year ago at 815.992 metric tons. Total California fresh market grape production is expected to be about even at 803.000 tons.Total production during the 2001 season for selected Northern Hemisphere table grape producing countries is expected to decline 2 %.U.S. table grape exports during2001 posted a 3-% increase over the previous year with a stronger market in the United Kingdom and growth to Asian markets continuing.
United States The table grape industry continues to successfully market its grapes overseas. In 2001, approximately 298.918 tons were shipped at a value of $389 million. Although exports to the largest market, Canada, declined slightly, moderate increases to the United Kingdom and strength in the Hong Kong and Malaysian markets helped to offset any declines. The second largest market for U.S. grapes continues to be Hong Kong with shipments to Malaysia. During 2001, table grape imports posted a 13-% decline. About 11 % and 14 % of grapes were imported from Chile and Mexico, respectively. Argentina, although accounting for less than 2 % of total imports, more than doubled the amount that they shipped during 2000.
Canada Canada imported about 10 % of grapes during 2001 compared to the previous year. During 2001, the United States supplied about 65 % of the total grapes imported into Canada; Chile supplied about 22 % and Mexico only about 6 %. The remaining 7 % was shipped from Italy, South Africa, and Argentina. During 2000, Peru began to ship grapes to Canada and in 2001 shipped about 190 tons, nearly six times the amount during 2000.
Mexico Unfavourable weather conditions in 2001 caused table grape production to drop an estimated 18.370 tons from 2000 and total 171.000 tons for the year. Water shortages and the lack of available credit are considered limiting factors in expansion efforts. Mexican grape consumption is increasing but 2001 imports are expected to be about even with the previous year. U.S. table grape exports to Mexico during 2001 totalled 35.380 tons, down 12 % from 2000. Chile is expected to supply about 40 % of total imported grapes while the United States is expected to supply the remainder.Chilean shipments do not directly compete with those from the United States; Chile typically exports to Mexico in June and July, while the United States exports primarily during August through December.
Chile Table grape production is expected to increase 2 % in 2001 to 955.000 tons. Exports during 2000 reached a high of 596.196 tons with top destinations including the United States, the Netherlands, Mexico, the United Kingdom and Hong Kong. Exports during 2001 declined 9 % overall but shipments to Mexico were 18 % higher than 2000 at a level of 32.843 tons valued at $27 million. Chile produces over 36 varieties of table grapes for export. Thompson

Seedless, Flame Seedless and Ribier are the bulk of production. Production of the Red Globe variety has increased significantly in the last few years, as most replanting has been with this variety.

China Production in calendar year 2001 is expected to be 3.80 million tons, up 16 % from the 3.28 million tons in 2000. Most of China's grape production is made up of 12 different major varieties, Jufeng being the most popular. Red Globe acreage is mainly located on China's east coast. Within this area, growers have experienced some disease problems. Despite reports of efforts to increase the Red Globe production base, near term competition from the Red Globe is expected to be limited. Acreage planted in grape vines is growing along with grape processing, particularly for wine. However, at least for the short term, China remains a net importer of grapes. Despite improving distribution and storage infrastructure for fruit, reported postharvest gaps still exist supporting continued growth in exports of U.S. table grapes to China. U.S. exports to China decreased in 2001 to 7.117 tons. Import tariffs in 2002 dropped to 23.2 % (effective tariff 39 %) from a level of 40 % (effective tariff 58.2 %) during 2001. This rate is for countries that have most-favored-nation (MFN) trading status with China (i.e. WTO members). The import tariff for countries that do not have MFN trading status with China decreased from 100 % in 2001 to 80 % in 2002. The VAT rate remained unchanged at 13 %. This tariff change is likely to help increase China's grape imports. U.S. imports of grapes from China, although still very small, almost doubled during 2001. The bulk of the shipments came in during the month of March last year with some very small amounts in early summer. The trade continues to expect China to become a major competitor to U.S. exports in the next 2 to 5 years, particularly in Southeast Asia. Most current trade data shows that during 2001 China began shipping table grapes to Bangladesh and India. In addition, grape export trade that was established to Sri Lanka in 2000 increased slightly in 2001.

Japan Japan's table grape production has been on the decline in recent years but imports of grapes, particularly the Thompson Seedless and Red Globe varieties, have helped to ensure a quality product on the Japanese market year round. Japan's top suppliers include Chile and the United States, but the Japanese also source product from Mexico, Taiwan, and New Zealand. During 2001, Japan was the United States thirteenth largest export market. Chile has increased the value of their grape exports to Japan from $19 million in 1999 to nearly $30 million in 2001. Comparatively, the United States, over the last year, has experienced a loss in market share with value of its shipments measuring only at about $5.5 million. The United States still faces some relatively high tariff rates, 17 % from March through October, and 7.8 % from November through February.

Greece About half of the 150.000 hectares planted under vine are devoted to the table grape and dried fruit industries. Greek table grape production estimates for calendar year 2001 have been increased to a record 328.412 tons. Export levels remained larger than the previous year but marketability to specific destinations shifted with the quality of the fruit available. Top destination markets typically include: Germany, United Kingdom, the Netherlands, and Eastern European countries such as Poland, Macedonia, Bulgaria, and Romania. During January – July 2001, availability of lower priced product helped to move larger quantities into the Netherlands, and the United Kingdom. Grapes imported into Greece are minimal and occur either during the off-season or to fill demand of grape varieties not typically grown in country. Most imported product comes from Argentina and Chile.

Italy Italy is reported to have the largest acreage cultivated with grape vines. Actual area planted for table grapes has remained steady over the last few years. Italy's top export markets include Germany, France, the United Kingdom and Switzerland. They compete with the United States for the United Kingdom market. During 2000, Italy exported a total volume of approximately 625.000 tons at a value of $ 457 million. The Italians source most of their

imported table grapes from France and Spain but also import from Central and South American countries such as Costa Rica, Ecuador, and Argentina.

Spain Table grape production is expected to decline about 9 % for 2001 from the previous year, due to heavy rains and warmer temperatures. Imported table grapes are mainly from Italy, Chile, France and South Africa. In 2000, the Spanish imported about 19.000 tons. During the first 10 months of 2001, despite lower production, Spain imported fewer grapes, with available data showing a 3% decline. Italy is the main supplier. Table grapes are exported mainly to Portugal, Germany, France, the United Kingdom and the Netherlands. During the first 10 months of 2001, Spain's top market for table grapes was the United Kingdom with a volume of 20.000 tons valued at $21.7 million. Total volume and value of grapes exported during January through October 2001 increased 2 % and 9 % respectively.

Turkey Turkey exported 64.873 tons of table grapes in 2000, with top markets including Germany, Austria, and the Russian Federation. In the first 10 months of 2001, Turkey's grape exports were about 29 % above the same period during 2000 and valued at about $27 million. Turkey imported a very small amount of grapes from Chile and South Africa during 2001 and only about half of the amount that it imported in year 2000.

TABLE GRAPES: PRODUCTION, SUPPLY, AND DISTRIBUTION							
Country Year	**Production**	**Imports**	**Total Supply**	**Exports, Fresh Only**	**Domestic Fresh Consumption**	**For Processing**	**Withdrawal from Market**
Northern Hemisphere Countries							
Greece							
1999	287.000	1.413	288.413	102.458	135.955	50.000	0
2000	315.878	1.955	317.833	104.151	170.696	42.986	0
2001	328.412	1.500	329.912	117.000	167.912	45.000	0
Italy							
1999	1.562.000	12.000	1.574.000	578.000	696.000	300.000	0
2000	1.568.000	14.000	1.582.000	625.000	690.000	267.000	0
2001	1.580.000	14.000	1.594.000	635.000	689.000	270.000	0
Japan							
1999	242.000	9.005	251.005	24	219.481	31.500	0
2000	237.500	13.218	250.718	23	222.695	28.000	0
2001	234.200	15.000	249.200	20	219.180	30.000	0
China; Peoples Republic of							
1999	2.708.127	25.859	2.733.986	437	2.273.159	460.390	0
2000	3.280.000	44.156	3.324.156	752	2.691.204	632.200	0
2001	3.800.000	52.408	3.852.408	920	3.015.488	836.000	0
Mexico							
1999	185.615	51.896	237.511	107.830	129.681	0	0
2000	189.370	73.744	263.114	115.414	147.700	0	0
2001	171.000	82.000	253.000	95.000	158.000	0	0
Spain							
1999	370.200	21.000	391.200	100.000	255.000	30.000	6.200
2000	351.000	19.200	370.200	111.000	236.000	20.000	3.200
2001	320.000	25.000	345.000	95.000	230.000	19.000	1.000

TABLE GRAPES: PRODUCTION, SUPPLY, AND DISTRIBUTION							
Country Year	**Production**	**Imports**	**Total Supply**	**Exports, Fresh Only**	**Domestic Fresh Consumption**	**For Processing**	**Withdrawal from Market**
Turkey							
1999	3.400.000	233	3.400.233	47.980	1.652.253	1.700.000	0
2000	3.600.000	173	3.600.173	64.873	1.750.300	1.785.000	0
2001	3.500.000	100	3.500.100	70.000	1.700.100	1.730.000	0
United States							
1999	804.882	383.672	1.188.554	238.987	949.567	0	0
2000	822.666	469.749	1.292.415	289.924	1.002.491	0	0
2001	815.922	414.000	1.229.922	298.918	931.004	0	0
Subtotal							
1999	6.851.697	479.219	7.330.916	1.175.279	4.037.937	2.111.500	6.200
2000	7.084.414	592.039	7.676.453	1.310.385	4.219.882	2.142.986	3.200
2001	6.949.534	551.600	7.501.134	1.310.938	4.095.196	2.094.000	1.000
Southern Hemisphere Countries							
Chile							
1999	815.000	97	815.097	473.525	93.000	248.572	0
2000	935.000	16	935.016	596.000	95.000	244.016	0
2001	955.000	12	955.012	580.000	96.000	279.012	0
South Africa; Republic of							
1999	227.671	0	227.671	183.716	39.378	4.577	0
2000	208.000	0	208.000	168.000	36.000	4.000	0
2001	210.000	0	210.000	170.000	37.000	3.000	0
Subtotal							
1999	1.042.671	97	1.042.768	657.241	132.378	253.149	0
2000	1.143.000	16	1.143.016	764.000	131.000	248.016	0
2001	1.165.000	12	1.165.012	750.000	133.000	282.012	0
Total Selected Countries							
1999	7.894.368	479.316	8.373.684	1.832.520	4.170.315	2.364.649	6.200
2000	8.227.414	592.055	8.819.469	2.074.385	4.350.882	2.391.002	3.200
2001	8.114.534	551.612	8.666.146	2.060.938	4.228.196	2.376.012	1.000

Table 1. (SOURCES: FAS Agricultural Attaché Reports, Bureau of the Census, NASS/USDA).

1.3 Primary product (fresh)

a) Consumption

Grapes are highly digestible and have a number of therapeutic properties: firstly, they are laxative and diuretic. They are useful in fighting dyspepsia, hemorrhoids, stones in the urinary tract and bile ducts,. They also activate liver functions, ease digestion, help reduce the cholesterol level of the blood and eliminate uric acid. Grapes are also disinfectant and antiviral, aid the nervous system, are useful in processes that demineralize the body such as pregnancy and nursing. To take best advantage of its therapeutic virtues, it should be eaten in the morning on an empty stomach. A natural tonic and detoxicant, grape therapy involves a

diet which leads progressively to eating only grapes throughout the day, gradually replacing other foods. Its juice is used in cosmetics to bleach and soften the skin. As well as being eaten fresh, grapes are used to prepare various desserts, jams, gelatins and sorbets. Nutritional composition is reported in Table 3.

b) Consumer preference

Table grape berries are appreciated by the consumer for their sweetness indeed high quality berries should have more than 14% SSC (soluble solids content) depending on the variety but the appreciation by the consumer depends even on the ethnic group. Acidity is anyway important too to balance the excessive sweetness of some grape berries. Different ethnic group have an appreciation for the berry depending more on the acidity than on sweetness. American consumer acceptance of Red Globe grape is strongly dependent on the ratio between sugar content and the titratable acidity: a ratio over 25 for the grape berries received the highest appreciation. For the American consumer, grapes must have SSC more than 15% and titratable acidity less than 0.8%. Even for Chinese consumer the high SSC was more appreciated but they were more sensitive to the level of titratable acidity.

Italian consumer prefers table grape berries with a very high SSC and very low titratable acidity but this appreciation can vary depending on the latitude, North and South.

	JAN	FEB	MAR	APR	MAY	JUN	JUL	AUG	SEP	OCT	NOV	DEC
Harvest period								✓	✓	✓	✓	✓
Market presence	✓	✓						✓	✓	✓	✓	✓

Table 2. The table grape calendar in the North Emisphere

Edible part	94 %	**Sodium**	1 mg
Water	80.3 g	**Potassium**	192 mg
Proteins	0.5 g	**Iron**	0.4 mg
Lipids	0.1 g	**Calcium**	27 mg
Glucides	15.6 g	**Phosphorus**	4 mg
Fiber	1.5 g	**Niacin**	0.1 mg
Energy	61 kcal	**Vitamin C**	6 mg

Table 3. Nutritional and energy information for grape (100 grams of product)

c) Characteristics of some typical Table Grapes varieties

Figure 7. Var. Regina

The Regina is one of the most ancient and common varieties of table grapes, with many local nicknames. It is called *Pergolone* in Abruzzo, *Inzolia Imperiale* in Sicily, *Mennavacca* in southern Italy, *Aleppo* in Romania and *Razaki* in Greece. It is certainly of Eastern origin, perhaps Syria, and was introduced to Italy by the ancient Romans, who held it in high regard. Even today it is much appreciated by consumers for its pleasant appearance and excellent flavor.

Berry appearance: Large, elliptical grapes, with a medium-thickness pruinous peel.

Berry colour: Golden yellow

Bunch Shape: Large, long, pyramid-shaped or cylindrical bunches
Berry flavour and texture: Crisp, sweet pulp with a neutral flavour
Refraction index (° Brix): Consumption: ≥15
Sale period (North Emisphere): August through October

Figure 8. Var. Italia

Obtained by crossing the Bicane and Hamburg Muscatel grapes, Italia is certainly one of the most popular varieties of table grapes for both its appearance and flavor, as well as its hardiness in withstanding handling and shipping. Italia grapes have large, consistent berries with a lovely golden yellow color, and a delicate, pleasant musky flavor.

Berry appearance: Large, oval grapes, with a medium-thickness pruinous peel.
Berry colour: Golden yellow
Bunch shape: Large, tapered, pyramid-shaped bunches
Berry flavor and texture: Crisp, sweet pulp with a delicate musk flavor. Thick, consistent pruinous peel.
Refraction index (° Brix): Consumption: ≥15
Sale period (North Emisphere): Late August through the end of December

Figure 9. Var. Crimson Seedless (seedless grape variety)

Crimson Seedless has rapidly become the preferred red seedless for supermarkets worldwide. Crimson has a sweet neutral juicy flavour and elongated berries that are light red in colour. Particularly impressive is the crisp, firm texture of the berries and the variety has exceptional shelf-life.

Figure 10. Var. Thompson Seedless

Almost everyone is familiar with this grape's light green colour, oblong berries and sweet, juicy flavour.

Berry appearance: Medium-large grapes, oval with pruinous peel.
Berry colour: From dark violet to golden yellow.
Bunch shape: Tapered or truncated-tapered bunches with average weight between 500 and 700 grams.
Berry flavor and texture: Fairly meaty, crisp pulp with neutral or slightly aromatic flavor. The sugar content of must ranges from 13 to 14% while the total acidity varies from 5 to 6/1000.
Sale period (North Emisphere): August through September

1.4 Secondary product (processed)

a) Grape processing for wine production

One of the most known and antique fruit processing activity is the wine production. This process is known since the age of the first settlements in the Tigris-Euphrates basin several thousand years before our era. From this region the vine, *Vitis vinifera* has been carried to all the Mediterranean Countries. Grape culture for wine production was known to the Assyrians and Egyptians by 3500 B.C. and to the Greeks by about 1400 B.C. Actually the wine production in the world is around 27 millions of ton and almost in all Continents wine is produced and consumed. France and Italy represents the most important exporters covering the 56% of the market in term of value of the product. Beyond the alcohol, wine contains interesting healthy compounds such as the flavonoids which guarantee for the protection from cardiovascular diseases and for this reason is known the French paradox: the Frenches has a diet richer in fat than the Americans but they have less incidence of cardiovascular diseases because the former drink more red wine than the latter. Moreover the tannin are antibacterial compounds and have astringent effect. The legal definition of wine from grapes is : the product obtained only from the partial or total alcoholic fermentation of fresh grapes, squeezed or not, or of grape must.
Different kinds of wine are produced all over the world but we can summarised in three main vinification process: red, white, and dessert. We will give here just an overview of the first two processes mentioning the main steps.

Red wine

Harvest

Red grapes must be picked at the technological stage of ripening which means:
maximum content of flavonoids (anthocyanins which provide the red color) and non flavonoids (phenolic acids which provides brown color) together with tannins (astringent taste), idrolyzable or mostly condensed (D-catechin, L-epicatechin, L-epigallocatechin, DL-gallocatechin) mainly localised in the peel; right equilibrium among these components is indispensable for good quality wine;
sufficient content of sugars to permit the production of legally speaking wine.
This stage of ripening for the red grape it is easy to detect because the berries peel changes from green to light red to deep red (high content of flavonoids and non flavonoids included tannins), which is the moment of picking. As the content of these compounds may be affected by the weather condition (high UV radiation, water stress, thermal stress), the measure of sugar content is indispensable even because is the sugars transformation which produces alcohol..
The sugar content (only fructose and glucose are found in grape berry) measured by a refractometer (RI = refractometer index in % or °Brix) should be above 19% to reach a right content of alcohol. Anyway, simple taste of the berries can induce the decision for the harvest. Berries with more than 17% of sugars are sweet and 19% of sugars provides a very sweet taste.

The conversion of sugar in alcohol is approximately 70% and for this reason it is used to multiply the RI per 0.6 to obtain the potential alcohol content. Too high sugar content (> 26 %) can give problems in the start of fermentation; too low value does not provide sufficient alcohol and gives very acid wine.
The acidity of the berries is another important characteristic which inversely correlated with the sugar content. So, generally speaking when the sugars increase the acidity decreases. The main acid is an acid present only in grape called tartaric acid. Other important acids are the malic acid and the citric acid. Even the acids content can vary depending on the climate condition during the grape growth, especially for the content of malic acid. Usually good wine has an acidity between 4 and 6 g/L in tartaric acid.
Picking of grapes should be the gentlest is possible to avoid crushing of the berries. Keep the bunch in one hand without squeezing and with the other hand cuts the stem (rachid) with the cesor. Neither pull the bunch nor rotate the bunch. After cutting the stem, place gently the bunch in the buckets. The buckets must be clean and as smooth is possible inside.
Not squeeze the bunches in the buckets. Crushing the berries in the harvest containers provokes the start of acetic bacteria fermentation. Sometime potassium metabisulfite powder is spreaded over the grapes to avoid this anomalous fermentation but this procedure can kill the yeasts over the berries peel hastening the start of alcoholic fermentation.

Unloading and destemming

Unload the buckets in the crusher where the berries will be pressed and the peel broken; usually the stems are removed to avoid the excessive add of salts and the herbaceous taste to the wine; in some cases, part of the stems can be left in the mass to provide acidity and tannins useful for the wine stabilisation.

Crushing

The crushing is very important step for red grapes. The operation serves to break the berries for extracting the must but, in the same time, the fragmentation of the peel allows successively the extraction of the pigments. In the past this operation was done by feet directly in the wood fermentors. Today different kinds of crusher-destemmer are available all based on mechanical squeezing of berries against the walls of the container. The typical one is the roller type consisting of two fluted, horizontal rolls of rubber-coated steel and stainless steel. The rolls are adjustable, and should be set so that the berries are thoroughly crushed without breaking the seeds or grinding the stems. For small amount of grapes simple screw-type crusher can be used as well as the vertical presser (torque).

Maceration and fermentation

This step has the objectives to transform sugars in alcohol and to permit the diffusion of the peel substances (pigments, pectins, acids, mineral ions) in the liquid.
From the crusher the must with the peels is pumped or moved to the container (fermentor) where fermentation and maceration will take place. The original containers were in clay or wood; today stainless steel is used to better control temperature and for the easiness of cleaning. The fermentor can be open on the top or sealed completely. In the open top fermentor, the fermentation starts and continues easily because of the large availability of the air for the yeasts.
In this process it is indispensable to break once a day the “hat” of pomace (peels, seeds, residues of stems) which floats on the surface of the must during the fermentation, due to the carbon dioxide pressure created by the fermentation process. This practice can be done with a special stick or removing the liquid from the bottom of the fermentor and, with a pump, pouring with pressure the liquid on the “hat”. Other technologies are today used to carry out this practice but the aim is always the same: break the hat and allow the pigments diffusion from solids to the liquid.

At the beginning of fermentation it is a good practice to add some sulphur doxide (Table 4) to select the yeast, halting the bacteria development, and to favour the pigment diffusion from the peel.
During fermentation, a huge amount of heat is released and temperature of the mass can reach even 40°C depending on the environment condition. So the control of temperature is very important because this value of temperature can stuck the fermentation compromising the good results of fermentation. The maximum reachable temperature must be 35°C which usually is reached at the maximum yeast reproduction rate and even this temperature must last only few hours. To reduce the temperature if water is available it is good practice to wet outside the container if wood, metal, or clay; cement container is harder to cool down. If it is too cold, the container must be warmed by heating the environment or heating the liquid with special tools such as infrared lamps, electric resistance.
Usually on the peel there is plenty of yeasts (*Saccharomices cerevisiae*) and in the red vinification there is no need to exogenous supply. For white vinification the yeast supply is common practice.
During fermentation, a huge amount of carbon dioxide is released, thus the room must be ventilated to flush outside the CO_2.
At the end of fermentation the sugar content in the liquid should be below 1 g/L to avoid further anomalous fermentation (acetic fermentation) o rifermentation inside the bottle. At this time the must has been transformed in wine: sugars in alcohol, the liquid is red, no sweetness, light acidity.

Stabilisation

When the liquid is removed from the fermentor, is not completely clear, and the clearness is depending on the vinification process and the quality of grapes.
Usually for the red wine after the alcoholic fermentation, secondary fermentation (malolactic) which has the aim to convert the malic acid in lactic acid reducing the acidity and giving a smoother taste, occurs. This fermentation is strongly depending on the outside temperature. In the past, this fermentation due lactic bacteria could occur even the following summer. Today it is commonly induced by adding of bacteria and slightly heating the liquid (30°C).
At this time a control of sulphur dioxide concentration in the wine is carried out. The level of sulphur dioxide should be around 20 mg/L. When this fermentantion is accomplished, further add of potassium metabisulphite is done to reach the concentration of 30 mg/L and 35 mg/L, respectively for red and white wines.
Proteins and pectines are in solution and need to be removed before bottling the wine. Even tannins sometime must be removed to reduce the astringency.
This process is called *clarification* and is carried out by adding proteic compounds such as albumine which is sold as pure (to use 40 mL/100 L and) or egg yolk can be used (1 stirred egg yolk per 225 L of wine), or gelatine (sold as liquid; to use 30 g/100L), or fish glue (dilute 1 kg in 100 L of water and then take 2-3 g per 100 L of wine) for negative charged substances as tannins.
After clarification the red wine can be stored in wood barrel (big or small such as barrique, 225 L) for few or several months, even years or in glass, plastic, stainless steel containers. Storage in wooden barrel (usually this process is called fining) such as barrique, clarification is not done and the precipitate is often remixed in the liquid mass to confer a more complex aroma bouquet.
The pomace remained in the fermentor is removed and sent to distillation process (grappa) or pressed to obtain further lower quality wine.

Filtration and bottling

Before the bottling, filtration is a common practice. Today this practice especially for red wine tends to be avoid because it can remove some compound mainly pigment reducing the

color intensity and modifying the taste. As the wine move from one continent to another changing temperature continuously, bottle stabilisation is indispensable and so the filtration is necessary. Several kinds of filtration can be done: one of the most common is with fossil flour, or with cardboard to remove rough particles and successively, right before bottling, vertical, synthetic septum filters are used to remove microorganisms.
After filtration, the wine is bottled in very well washed bottle and then capped with the cork or silicon cap. The wine can be kept in the bottle before selling for several months or be sold immediately.

Summarising the easiest way to make wine:
1. pick gently the grape bunches
2. gently place the bunches in the buckets; NOT SQUEEZE;
3. transfer quickly the buckets to the processing place; AVOID SUN EXPOSURE
4. destem
5. gentle crushing, don't break excessively the peel
6. THE FERMENTOR MUST BE CLEAN and in the shadow or inside
7. add SO2
8. mix once or twice a day the hat with the liquid; when fermentation starts bubbling is visible on the liquid surface
9. CONTROL THE TEMPERATURE
10. VENTILATE THE ENVIRONMENT TO REMOVE CO2
11. gentle remove the liquid from the fermentors (avoid to remove the solid materials from the bottom) of the fermentor in other clean container placing on the opening a special tool or if the neck of the containers is small such as (10-20 cm diameter) cover the liquid surface with food oil, inodorous
12. if the wine is too astringent, egg yolk can be used (1 per 225 L of wine)
13. filtration can be necessary before bottling; gentle remove the wine from the top and let it flow through cotton fabric or gauze

For all the steps the cleanliness of the equipment and the containers is very important. Use food detergents for machinery and metabisulfite solution or sulphur burning to clean the containers. **SO_2 adding can be avoided only if all the containers are very well cleaned.**

sound grapes	5
decayed grapes	20
very sweet grapes	10-15
warm grapes	15-20
cold grapes	3-5
acid grapes	10-15
very red grapes	25-40

Table 4. Use of potassium metabisulphite (g HL^{-1})

White wine

The white wine production differs from the red wine production for the removal of the peel from the flesh after the crushing. The reason of this procedure is to avoid the transfer of pigments from the peel which are very oxidable thus they can produce unpleasant color and flavours to the wine. In the past white grapes varieties were fermented with the peel as red wine vinification, but today only partial fermentation in some case is done with the peel. Anyway in the case of unavailability of special equipments, to produce white wines is possible to follow the steps of red wine production.

The first recommendations for the harvest and the field transport are the same of those for the red wine production. The main difference is in the crushing technique because today the most used for the white wine production is the pneumatic pressure system. In this case the air or nitrogen pumping inside a plastic airtight balloon allows the squeezing of the grape berries against the wall of a cylindrical metal container with the perforated bottom. In this way, the berries blow up releasing the flesh and the must, leaving the peels almost intact. The squeezing can be carried out with a simple torque using very light force.The clear must is then moved to the fermentor for the fermentation without maceration.

In the fermentor, there is only small amount of pomace and there is no formation of “hat”. All the fermentation process today occurs without air contact to avoid oxidation. and usually at temperature around or below 20°C. In this kind of vinification the fermentation start is induced by the add of yeasts and nutrient compounds such as nitrogen (ammonia form), yeast ghosts, thiamine, and sulphur dioxide.
Clarification and filtration are more or less the same of the red vinification. Usually it is used bentonite to clarify the wine (dilute bentonite in water 1kg in 16 L of water and then 30-60 g of the solution per 100L of wine).
Today most of the high quality white wines are produced by barrique fermentation: the must is pumped in new barrique and left fermenting directly in the barrique with the precautions to carry out the “batonage”, which means the mixing of the precipitate in the liquid mass during the fementation and in the following secondary fermentation and storage of the wine.

b) Raisins Production

History books note that raisins were sun-dried from grapes as long ago as 1490 B.C. But several hundred years passed before it was determined which grape variety would make the best raisin. Phoenicians and Armenians traded raisins with the Greeks and Romans, and the fruit became a favorite. Greeks and Romans decorated places of worship with raisins and handed them out to winners in sporting contests. Roman physicians prescribed raisins to cure anything from mushroom poisoning to old age. With their growing appeal came an increase in value. In fact, two jars of raisins could be traded for one slave in ancient Rome. The fruit also became popular among famous warriors of the time. Emperor Augustus feasted on small roasted birds stuffed with raisins, and Hannibal stored raisins in his troop rations while they were crossing the Alps. Sometime between 120 and 900 B.C., practical ways were developed to grow the grapes that would become raisins. At that time, Phoenicians started vineyards in Greece and southern Spain, and Armenians created vineyards in Persia (Turkey, Iran and Iraq). These areas not only had perfect climates for growing raisins, but they also were close to the first commercial markets for raisins Greece and Rome. The vineyards of Spain grew muscat raisins, which are oversized, with seeds and full of flavor. Farmers of Corinth, Greece, grew another kind-tiny, seedless, tangy raisins called currants. In the 11th century, crusader knights first introduced raisins to Europe when they returned home from the Mediterranean. Packing and shipping techniques were good enough by that time to ship raisins throughout northern Europe. By the 14th century, raisins became an important part of European cuisine. Raisin prices skyrocketed. The English, French and Germans attempted to grow grapes for raisins, but their climates were too cold for drying the fruit. In the meantime, Spaniards were perfecting viticulture, or grape growing. They were using grapes to make dry table wine, sweet dessert wines and muscat raisins.

Drying and handling In January, vines are pruned back to one or two canes, which are the most productive branches that will bear the next autumn's fruit. In early spring, the first grape buds appear, followed by tiny clusters of grapes in March or early April. By late August, the grapes are handpicked from the vine, put on clean trays between the vine row and laid in the sun for two or three weeks to dry. When moisture content reaches 15 %, the trays are rolled carefully into bundles and baked in the sun for a few more days. Then they are taken to the grower's yard and loaded on a conveyor belt to separate the larger stems from the raisins. The raisins are transferred to large wooden bins for moisture equalization and then shipped off to their next destination-packing plants.
Before raisins are unloaded, government inspectors gather samples from the middle of each box to make sure they are free of imperfections. Then raisins are processed, passing through a series of conveyor belts and drums to remove remaining stems, chaff or lightweight fruit. The raisins also are sent through a vacuum air stream to catch any other undesirable materials. Finally, they are size-graded and thoroughly washed in pure water. In preparation for

packaging, the raisins are moved through a laser sorter. The sorter's light beams, along with a computer, see if anything besides raisins is passing through the stream. If material other than a raisin is present, the computer sends a burst of air to knock it out of the stream of raisins and down a trough. After final inspections, raisins are automatically weighed and packed in a variety of convenient sizes.

Production of micotoxins due to fungi is one of the most concern today for raisins production especially for field drying and during the storage in inidoneous place. Warm place (20-30°C) and high humidity must be avoided and ventilation through raisins is very important to prevent fungi formation.

Solar driers are today available to speed the process and to control better the conditions of drying in order to avoid the formation of fungi and the consequence production of micotoxins.

Drying can be done even with rotating, perforated drum filled with grape berries, invested by hot air flow. The process is very fast but special attention must be addressed to temperature. Moreover is very energy cost process.

In grape drying, the rate of moisture diffusion through the berries is very influenced by the waxy cuticle of the grapes. In this way, many researches describe the importance of the pretreatments on the drying rate. Dipping in hot water or the applying of chemicals products (sulphur, caustic and ethyl or methyl oleate emulsions) as pretreatments is widely used in order to obtain grape drying. The aim of using those pretreatments solutions is to increase drying rates and to produce raisins of the desired quality level. Grapes were surface treated by dipping in ethyl oleate, which greatly increases the drying rate by altering the waxy layer structure at the grape surface, thus reducing the internal resistance to water diffusion.

Figure 11. Raisins

Raisins Juice From part of the crop, the processors make raisin juice and raisin paste. Raisin juice is a pure extract of raisins. Throughout several processing stages, raisins are leached with water to produce raisin juice. The liquid then is evaporated in a vacuum pan to produce a self-preserving concentrate. Raisin juice concentrate contains a minimum of 70 % natural fruit soluble solids. It's added to a variety of foods, including dairy, confectionery and bakery items.

Raisins Paste Raisin paste is made from 100 % raisins, produced by extruding raisins through a fine mesh screen. Raisin paste can be used to add visual appeal and flavor. It's a stable ingredient that sweetens naturally. Raisin paste has excellent sweetening capabilities in fine confectionery fillings and soft-center candies. In bakery items, such as breads, cookies and pastries, the paste inhibits mold, extends shelf life and enhances flavor.

c) Grape Juice

The methods for the grape juice preparation are very different in order to the varieties used and local traditions. The juice may be extracted from the grapes after heat treatments, to obtain the solubilization of some constituents (colour) or without preliminary heat treatments. The preparation of the grapes for heating is similar to the one of wine production. Successively, the red berries are heated up at 80-84°C in stainless steel pots or in tubular heat exchangers. During this treatment is requested to control the warming in order to prevent an excessive tannins and pectins solubilization from the cluster and the skins.

For the juice extraction, the continuous press are recommended. Applying this kind of press, after the product heating, a treatment with clarified enzyme (pectinase) is requested and then the product pass through the press. Then the extract juice is pasterurised at 88-90°C, then cooled and stored at low temperature (-2, -5°C) in order to have a good sedimentation of the tartaric product ($KHC_4H_4O_6$) and the colloides. The grape juice before the pasteurization treatment may be degassed. Sometime juice can be clarified with albumin, casein and bentonite.

1.5 Postharvest Physiology and Technology Requirements

Maturity Indices

Harvest date is determined by Soluble Solids Concentration (SSC) of 14 to 17.5% depending on cultivar and production area. In some situations, the SSC/titratable acidity (TA) ratio of 20 or higher is used to determine maturity for early ripening varieties of early production areas. For red and black colored varieties, there is also a minimum color requirement.

Optimum Temperature

Grapes can be stored at -1.0 to 0° C. The highest freezing point for berries is -2.1° C, but freezing point varies depending on SSC.

Optimum Relative Humidity

90-95% RH and an air velocity of approximately 6-10 meter per minute (MPM) is suggested during storage.

Table 5. Rates of Respiration (of grape clusters, i.e. berries + stems)

Temperature	mL CO_2 kg^{-1} hr^{-1*}
0° C (32° F)	1-2
5° C (41° F)	3-4
10° C (50° F)	5-8
20° C (68° F)	12-15

Stem respiration rate is approximately 15 times higher than berry respiration.

* To calculate heat production, multiply ml CO_2 kg^{-1} hr^{-1} by 440 to get BTU ton^{-1} day^{-1} or by 122 to get kcal $metric^{-1}$ ton day^{-1}.

Rates of Ethylene Production

<0.1 mL kg^{-1} hr^{-1} at 20° C (68° F)

Responses to Ethylene

Table grapes are not very sensitive to ethylene. However, exposure to ethylene (>10 ppm) may be a secondary factor in shatter.

1.6 Export Quality Assurance

Today the export of foods is strongly dependent on the quality certification of the product to be exported and to the respect of quality and safety requirements of the Country where the product will be sold. This mean that the grower/exporter must write an Export Quality Manual where it is described all the process from the harvest through the handling to the packing and shipping. This means that the product must be followed in the field, at harvest, in the handling process, in the postharvest treatments and storage techniques, and finally in the shipping, coding each single lot to match the requirement of traceability. Each box of table grape must have, beyond all the information on the variety, net weight of the grapes, the category, storage conditions, a code of traceability which permits, in any case, to go back to the time of packing (Fig.12)

Figure 12. Detail of a table grape box.

1.6.1 Quality Standard for table grapes

a. Definition

This standard applies to table grapes of varieties (cultivars) grown from *Vitis vinifera* L. to be supplied fresh to the consumer, table grapes for industrial processing being excluded.

b. Provisions concerning the quality

The purpose of the standard is to define the quality requirements for table grapes after preparation and packaging.

<u>Minimum requirements</u>

In all classes, subject to the special provisions for each class and the tolerances allowed, bunches and berries must be:

— sound; produce affected by rotting or deterioration to make it unfit for consumption is excluded,

— clean, practically free of any visible foreign matter,

— practically free from pests,

— practically free from damage caused by pests,

— free of abnormal external moisture,

— free of any foreign smell and/or taste.

In addition, berries must be:

— intact,

— well formed,

— normally developed.

Pigmentation due to sun is not a defect.

Bunches must have been carefully picked.
The juice of the berries shall have a refractometric index of at least:
— 12 º Brix for the Alphonse Lavallée, Cardinal and Victoria varieties,
— 13 º Brix for all other seeded varieties,
— 14 º Brix for all seedless varieties.
In addition, all varieties must have satisfactory sugar/acidity ratio levels.
The development and condition of the table grapes must be such as to enable them:
— to withstand transport and handling, and
— to arrive in satisfactory condition at the place of destination.
Classification
The table grapes are classified into three classes defined below:
i) *`Extra' class*
Table grapes in this class must be of superior quality. In shape, development and colouring the bunches must to be typical of the variety, allowing for the district in which they are grown, and have no defects. Berries must be firm, firmly attached, evenly spaced along the stalk and have their bloom virtually intact.
ii) *Class I*
Table grapes in this class must be of good quality. In shape, development and colouring the bunches must be typical of the variety, allowing for the district in which they are grown. Berries must be firm, firmly attached and, as far as possible, have their bloom intact. They may, however, be less evenly spaced along the stalk than in the `Extra' class.
The following slight defects, however; may be allowed, provided these do not affect the general appearance of the produce, the quality, the keeping quality, and presentation in the package:
— slight defects in shape,
— slight defects in colouring,
— very slight sun-scorch affecting the skin only.
iii) *Class II*
This class includes table grapes which do not qualify for inclusion in the higher classes, but satisfy the minimum requirements specified above.
The bunches may show slight defects in shape, development and colouring, provided these do not impair the essential characteristics of the variety, allowing for the district in which they are grown.
The berries must be sufficiently firm and sufficiently attached, and, where possible, still have their bloom. They may be less evenly spaced along the stalk than in Class I.
The following defects are allowed provided the table grapes retain their essential characteristics as regards the quality, the keeping quality and presentation:
— defects in shape,
— defects in colouring,
— slight sun-scorch affecting the skin only,
— slight bruising,
— slight skin defects.

1.6.2 Safety

Today special attention is given by the market to the safety of the product. HACCP (hazards analysis critical control points) has become mandatory in all the Developed Countries and the Quality Certification is still voluntary but most of the Companies are today quality certified. Thus, farmers from Developing Countries to export in Developed Countries must know the commercial quality standards but above all the safety requirements. GAP (good agricultural practice) and GMP (good manufacture practice) are always requested from the Importers and

the big Distribution Companies. Handling and storage are the two points which requires more attention. For table grapes, the problem related to the concentration of SO_2 in the storage room as well as in the shipping box are update and several times lots of table grapes are blocked in the European Market due to high concentration of SO_2. Unfortunately the concentration of SO_2 in the box is conditioned by the relative humidity inside the plastic bag and so difficult to control. In Fig13 the injury provoked by the SO_2 on the berries and on the rachid is shown.

Figure 13. Bunch injured by SO_2 treatment

Moreover other problems are the mycosis and the mycotoxins. Cleaning and disinfestations are the prerogative to reduce the potential for contamination. The condition of the evaporator, floor, ceiling, and walls such as shown in Fig.14 are not tolerable.

Figure 14. Untolerable sanitary condition of a cold room for table grapes.

Mycotoxins are even more dangerous than mycosis. Raisins, decayed grapes, and wine are most of the time contaminated, but the concentration usually is low and the type of mycotoxins is not so dangerous for the consumer. The risks are not only for the ingestion of the product but even for the workers which take up the mycotoxins with the respiration. Anyway the European Commission is lowering the threshold of concentration which is today 2 µg/kg for the aflatoxin B1 (the most dangerous toxin which can kill the human being) and 10 µg/kg for the total content in raisins. The aflatoxins are caused by the fungus *Aspergillus flavus* and *A. parasiticus* which are very diffuse and proliferate in conditions of high relative humidity and room temperature. In table grapes and in wine the most important mycotoxin is the ochratoxin A which is produced by *Aspergillus ochraceous* and *Pennicillium verucosum* . The colonisation occur in the field after the color turning of the berries. For the wine the EC

legislation has not fixed a threshold but most of the Countries are checking the wine for ochratoxin with a threshold of 0.5 µg/l. Contamination in winery is very common and the condition of bottle or wood containers storage as shown in Fig.15 is not any more tolerable.

Figure 15. The presence of moulds in the cave to store the wine is not anymore tolerable

2. Postharvest Operations

2.1 Harvest

Harvest represents the moment of detachment of bunches from the vine at the proper level of maturity. It should be performed without mechanical damage and product loss, as quickly as possible, minimizing the costs. At the present, hand harvest is the only harvesting system for table-grapes. The primary advantages of hand harvest are:

- human picker can handle with care bunches avoiding mechanical damage;
- selection of fruits starts on the vine because the picker selects maturity and appearance;
- multiple (generally no more than two) harvest for grading the bunches on the vine;
- minimum of capital investment.

Harvest rate depends on the grapes vine growing system, the number and expertise of workers, and packing system adopted. Very high harvest rate could be obtained using growing system called Italian pergulate (Tendone) which permits a fast harvesting considering that bunches are concentrate in the middle of the row more o less 1.7 m height from the ground; the picker picks bunches walking down the vine without need of ladder or stool (Fig.6).

The main problems with hand harvest are due to labor management and picker skill. Moreover quality is such an important aspect in successful marketing that hand harvest is still the only method used for table grapes. Management should be very careful for effective use of hand labor. A short training period is necessary for harvesting and packaging grape according to the market request. At the present, table grapes harvesting is carried out by the picker that selects the bunch and cuts the stem using very sharp shears. Before releasing the bunch in the box, the picker generally removes brown and moldy berries.

Thus, the picker performs the following operations:

- **bunch selection using color and eventually dimension as selection criteria;**
- **detachment of the bunch selected by keeping the bunch in one hand and than with sharp scissor cut the stem**
- **bunch trimming and cleaning (removal or decayed and moldy berries)**
- **place gently the bunch in the box, without pressing or squeezing**

In the case of "field packing", table grapes may be picked, sorted and packed directly into the shipping container by the picker (Fig.16).

Figure 16. Table grape harvesting and field packaging.

Generally the pickers and the packer work together: the picker detaches, trims and cleans the bunch, the packer places the bunch in the shipping container and arranges the packing materials like the sponges tissue paper that are used to improve product appearance and to reduce bruising among the bunches during the following operations. The pickers walk down the vine. The packer move all the packing materials and the table used to support the container during the filling operation. Empty and filled container are left on ground and carried by another worker. This system minimizes rehandling of the fruit, but makes the quality control on the product more difficult than in the packinghouse.

A particular type of field packing is the so called "avenue packing". In this system pickers and packers do not work in pair, but they are located in different places. The picker picks and trims the bunches and places them into field lugs. When the lug is filled, it is transferred to the packer that use a working table located in the avenue between vineyard blocks. Packing materials are located close to the packing place. In this case quality control is still difficult, because the supervisor has to move around the vineyard in order to control the different packers

In case of field packing picker productivity is reduced in the range 50÷80 kg/h . The working efficiency depend on bunches density in the vine; bunch size, uniformity of berry color and size.

In Developing Countries where local investment are difficult, this type of harvest for table grapes more than for other fruits should be promoted for few important reasons:

the cost of labour is lower than in Developed Countries

high availability of workers

training of picker and packer is low cost comparable to buy equipment
no great investments are required
In the “shed packing” (in the packinhouse), bunches are harvested by pickers and placed in field lugs untrimmed; in this case field lugs are generally made in plastic with the following dimension 0.6 x 0.4 x 0.25 m, the weight of grape is generally into the following range 18÷20 kg (Fig.17).

Figure 17. Table grape harvesting in field lug for shed packaging.

Usually grapes tolerate this depth, but it could be decreased to avoid bruising due to compression of bottom layers of table grapes. The lugs are vented on sides and bottom to facilitate air circulation. To avoid fruit cutting, ventilation slots are normally rounded so that inside surfaces is easy to clean and smooth to reduce fruits abrasion injury. Rough handling and impacts can increase roughness of the internal surface and create fruit abrasion problems. If wood lugs are used, they should be coated (paint or varnish-type) to reduce this problem.
The picker productivity range 100 ÷ 150 kg /h if the bunches are placed in filed lug and subsequently cleaned, trimmed and packed in the packinghouse..
The first step in fruit protection from mechanical injury is a careful field supervision. Inaccurate picking or packing procedures like over-filling the containers or beating bunches against container hard surface dramatically reduce the product quality and postharvest life of table grape.

2.2 Packinghouse (shed) operations

The lug should remain in the shade to wait for the transport to the shed. At the shed, grapes are precooled as soon as they arrive from the field (generally late in the morning or in the first hours of the afternoon). Grape bunches are packed the day after or later, in relation with the market request. Often the packinghouse operations are carried on when the weather forecast does not permit the field packing for more than one day.
In the packing line, table grape is not dumped on a packing belt but it is packed directly into the shipping container (box, plastic bag, basket) from field lugs. Generally the worker stands in front of a work-table where the hole for trimmed materials, the shipping container positioned on the scale pan, and the field lug are located (Fig.18).
The worker picks the bunch from the filed lug, trims and cleans it by using small and sharp scissor, and places it in the shipping container using the packing materials. When the

shipping container is ready it is moved on a belt-conveyer which carries the container to the end of the line where it is stacked on a pallet for the shipment.
The packing line is generally completed with idle roller conveyer for empty shipping container, that is located 0.40÷0.50 m over the belt conveyer. The trimming material can be collected in individual container located down the working table or, even better, on a belt-conveyer that moves the materials in the opposite direction of the packed grapes (Fig.19).

Figure 18. View of typical packing line for table grape

Figure 19.View of a modern packing line for table grape: workers use gloves, overall and cap.

Wrong design of sorting space and lack worker expertise is probably the most limiting factor of the packing facilities, considering that the main operation for product preparation are done by hand. In the packing line worker productivity range from 50 ÷ 120 kg /h: the smallest shipping plastic basket is 250÷500 gr, the maximum is 7.5 kg shipping container.
It should be considered that packinghouse operation is indispensable if wrapped, labeled and weighted container (bag, basket, tray) should be produced as required by the supermarkets. Moreover the hygienic conditions that could be guaranteed in the packinghouse make this packing system much more open to future development.

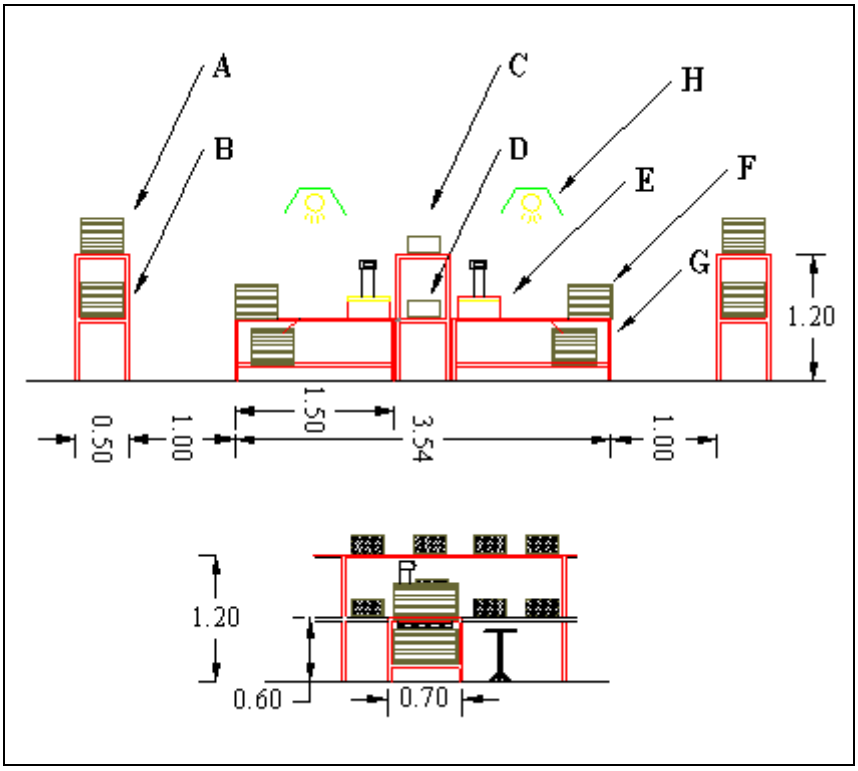

Figure 20. Scheme of typical packing line for table grape with the particular of working table. Cross section and side view (dimension in meters). A Empty field lugs; B Field lugs with table grape untrimmed; C Empty shipping container or package and package materials; D Packed grape; E Scale; F Field lugs with table grape untrimmed ready to be worked; G Lug for trimmed materials; H Light.

2.2.1 Packing and packaging materials

Packing can be viewed as simply a convenience to create the minimum commercial unit for each step of the product commercial life. For instance basket, box and pallet respectively represent the commercial unit for retail, gross and shipment.

Considering that shipping container represent a convenient unit to transfer of grape from the point of production to the point of final sale or consumption, it must be designed and used in order to protect individual bunches. This is very important in Developing Countries allowing to reduce the cost of investment if the harvest and sorting operations are performed in the field.

The most important requirements of grape package are the following:

bunches must be immobilized within the container and they should be cushioned against impact.

the package should be higher than the bunches and it is necessary to avoid over-filling to protected the berries from compression.

Some grape intended for export and some high-quality grapes for domestic market are “wrap packed”. Here, individual bunches are wrapped in tissue paper or sponge before being placed in their shipping container (Fig.21a).

Wooden containers are generally used because easy to handle in filed and resistance to high level of relative umidity in the field and during the storage (Fig.21b). Anyway the use of cardbox corrugated containers is increasing especially for grape that will be sold without prior storage (Fig.21c).

Figure 21. (*a*) Individual bunches are wrapped in sponge (left); (*b*) Wooden package with grape packed in plastic bag (middle); (*c*) Carton package with paper stripe separating bunches (right).

Plastic containers are even used especially in Developing Countries due to higher resistance (at relative humidity, mechanical) compare to wood and cardboard, easy to wash, light compare to wood, well perforated. For these reasons, and above all for food safety reason, the plastic container is recommendable but for the problem related to the plastic recycle, today most of the Developed Countries prefer wood or cardboard, the latter the best because is even not returnable.

The package's size changes among Countries. Generally dimension is in relation to the quantities that can be exposed, in a day or two, in the retailer. In addition, exporters should use package sizes that meet the requirements of metric shipping containers. Standardized pallet are the 1200 by 1000 mm (47.24 by 39.37 in) pallet base or 1200 by 800 mm (Europallet), which is very closely with the 48 by 40 in (1219 by 1016 mm) pallet base used by most food chains in the United States. Size of shipping packages that should be considered for export are: (outside base dimensions) 400 by 300 mm (15.75 by 11.81 in), 500 by 300 mm (19.69 by 11.81 in), 600 by 300 mm (23.62 by 11.81 in). Height range from 100 to 130 mm (3.94 by 5.12 in).

The label on the container will contain the producer brand name, the type of product (i.e. grape), the variety, weight, and all the information required by the local regulation (producer identity, production area, etc.). Traceability coding is today very frequent. The used languages on the label should be the native language of the country receiving the product. On the container illustrations of the packed product are recommended in order to facilitate product identification and handling. Post harvest treatments should be clearly marked on container if it is required. It should be considered that fungicide treatment should have the approval of the Country importing the product.

2.2.2 Cooling system

In grape postharvest, one of the most important factor affecting product quality is water loss from the stem due to its large surface to mass ratio. The condition of the stem in terms of color and turgor is an important quality factor and an excellent indicator of the postharvest treatment. The stem green color and its freshness are necessary conditions to maintain high quality level for the market.

The rate of water loss could be especially high before and during the cooling phase, if grapes are harvested during the hot dry season. The following actions can help to protect grapes:

Harvest early in the morning,

stack the pallets in the shade,

transport with covered trailer could improve the quality of the product.

The use of adequate precooling techniques, rapidly removing the field and the respiration heats, can reduce the water loss because minimizes the exposure of grapes to low vapor pressure conditions. In each condition flow and temperature level of cooling air through the

containers and exposure of the fruit to this air dramatically affect the grape cooling rate. Moreover the location and amount of venting of the containers (if they are present), alignment of the containers (air channels), and packing materials such as curtains, bunch wraps, and pads represent a barrier to the cooling process.
Table grape requires air precooling since most of the varieties is picked in hot season It could be performed using the following different system: room cooling or conventional system, tunnel cooling and pressure cooling. The use of eachone of these systems should be considered in term of cooling time, plant investment, and energy costs. Packaging type, design and materials dramatically affect the cooling time. Grape closed in plastic bag with the bunches wrapped in paper tissue o separated by a sponge layer and covers by a SO_2 generator pad require a cooling time 20 times longer than those packed in a open tray.

Room cooling

The use of existing cold storage rooms is one of the most common system. The cold air flow across the packed containers and refrigeration capacity have to be increased in order to guarantee the adequate air circulation with respect the normal flow in a cold storage rooms. In the room precooling the distribution of pallet and container respect to the air flow is determinant. Air should flow in channels created between the rows of pallets. Pallets and container should be aligned in order to avoid obstruction of the air flow between and across the container. Adequate precooling rate are obtained if is possible to maintain on and around the product the cold air speed close to the value of 0.5 m/s and the refrigeration power inside of the cold storage room should be more than 0.28 kW/t considering a product average density of 0.20 t/m^3.
It is necessary sometime to improve the air movement inside the cold room with mobile fans or/and to put the warm grapes quantity in proportion to the installed cooling power (generally this amount range between the 10÷20% of the total storage capacity of a cold storage room). A great advantage of this technique is that the pallets may be cooled and subsequently stored in the same place without other moving. The design and subsequent use of the plant is very simple and, in relation to the precooling time which longer than other methods, the power of refrigeration machinery results lower respect to faster methods.
In contrast, the disadvantages are that longer precooling time do not permit a dynamic organization of production. Long precooling time imposes a long pause in handling and rapid shipping is not possible. In the case of table grapes for long term storage, deterioration due to the long time exposure to an incorrect temperature, makes room cooling to be too slow.

Tunnel type forced air cooler

In the tunnel cold air is forced to flow around fruit trough the vented side of the container. Generally the containers are placed in the cooler so that the air must pass through the containers before returning to the evaporator surface (Fig.22). Precooling time is reduced increasing the air speed but an air speed over 3.5 m/s could injury the berries and break the paper use for packing, dramatically improving the energy consumption and plant cost (Fig.23 and 24). Using an air speed over 1 m/s is possibile to cool much more grape per day than in room cooling. Due to the short cooling time, despite the high air speed, the water loss rate from the fruit is negligible.
In tunnel cooling heat is carried away primarily by flow of air trough the bunches inside the containers rather than by flow past the outside of the containers as in room cooling. Using high air speed value and container adequately vented, more than a single row of pallet can be cooled at the same time. In this case air movement is always from colder fruit upstream to warmer fruit downstream, which avoids the sweating, but this flow cause a gradient of temperature among the parallel rows of pallets.

The use of precooling tunnel reduces cooling time, removing very fast the field heat. Potential for bunches deterioration is reduced and soon after the treatment, grapes can be stored or shipped in the best condition.
Compare to room cooling, the plant and energy cost are higher but, considering that they are specialized plant, the space required for a specific volume of product and the refrigeration losses are much more lower than in room cooling. Anyway, the use of this method requires higher cost for product movement if it is assigned to storage. Adeguate package design is required in relation to the fixed air speed and cooling time.

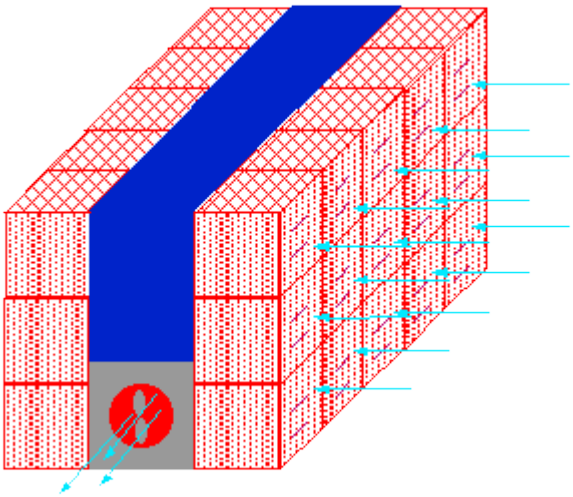

Pressure cooling plant. The fan produce low pressure level in the space between the pallets row. The pressure level should be lower -30 mm H_2O respect the environmental pressure. The air speed around the product is generally maintained around 0.8÷1 m/s

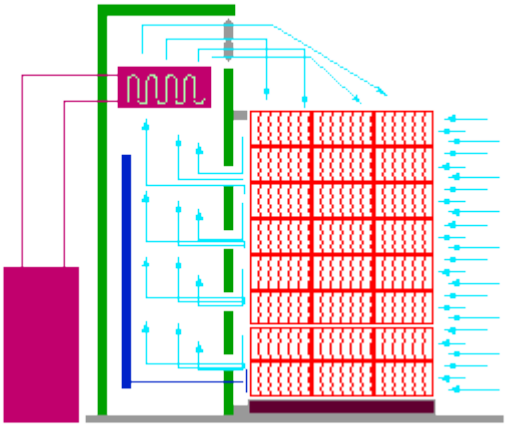

Cold wall cooling plant. The fan produce low pressure level on one side of pallet. The pressure level should be lower -30÷40 mm H_2O respect the environmental pressure. The air speed around the product is generally maintained around 1.0÷1.2 m/s. The pallets cooling result more uniform respect to other methods. This results more effective for plastic bag rapped product.

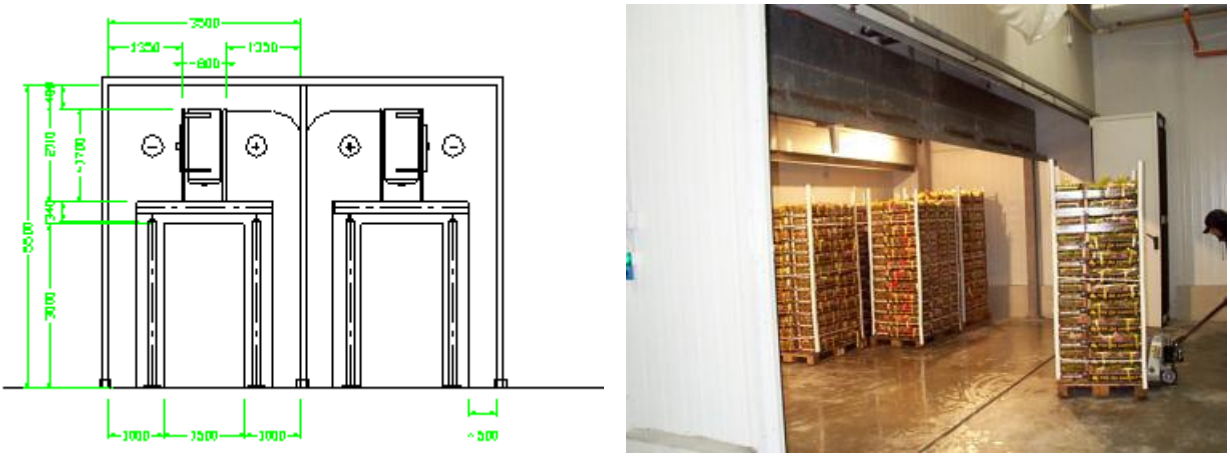

Tunnel precooler. The fan produce a high pressure level on one side of the tunnel (about 20 mm H_2O) respect the environmental pressure. The air speed around the product is generally maintained around 2.5÷3.5 m/s. The air cross the pallets row. Cooling rate result lower respect to other methods.

Figure 22. Different type of air precooler

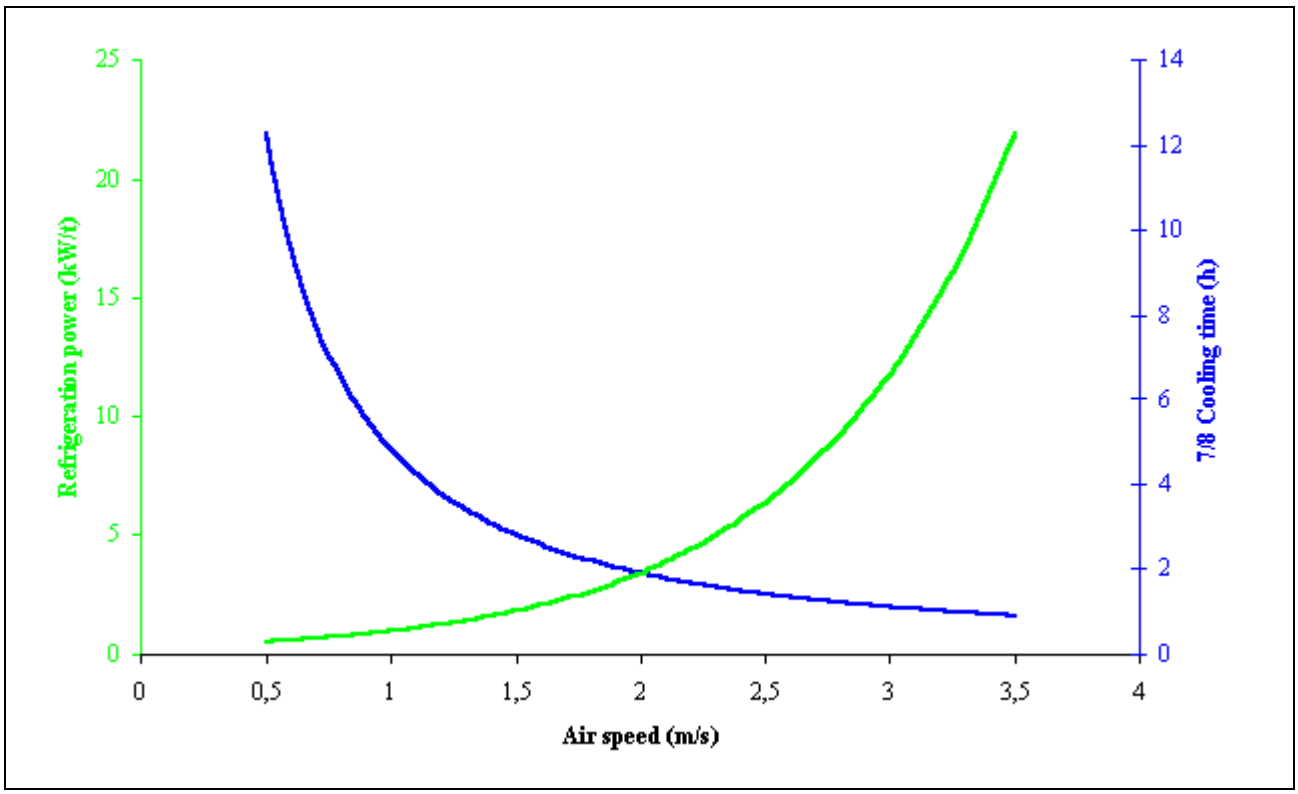

Figure 23. Refrigeration power and cooling time in relation to the air speed in table grape precooling packed in open trays. Starting from the cooling time it is possible to calculate air speed and refrigeration power required.

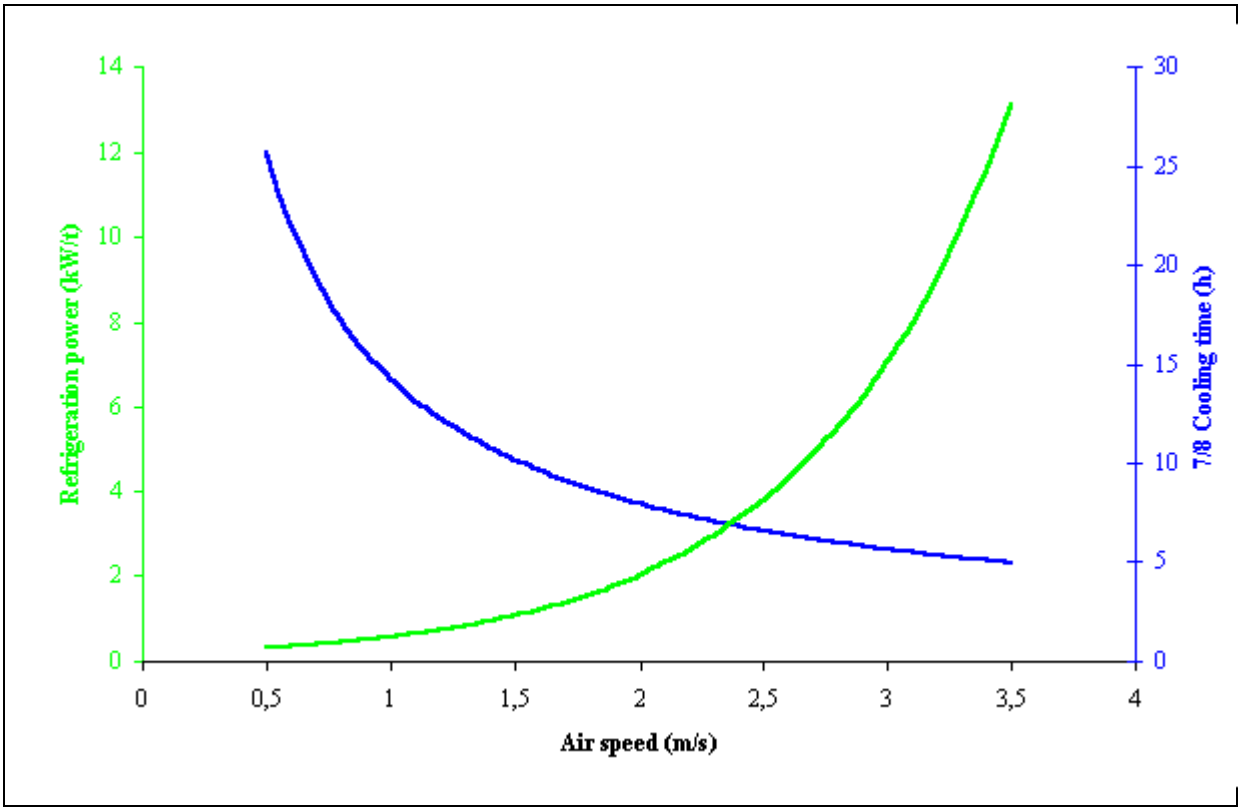

Figure 24. Refrigeration power and cooling time in relation to the air speed in table grape precooling packed in plastic bag. Starting from the cooling time it is possible to calculate air speed and refrigeration power required.

2.2.3 Storage

Cold storage

Recommended storage temperatures for table grapes are -1 ÷ 2 °C. The relative humidity should be maintained around 95%. Although temperatures as low as -2°C have not been injurious to well-matured fruit of some varieties, other varieties of low sugar content have been reported damaged by exposure to - 1.7 °C. Generally 0°C can be considered the optimum value for storage temperature. In the cold storage rooms uniform air circulation should be provided, but air velocity should be lower than 0.1 m/s in the channels between the pallets in order to minimize the loss of moisture from the stems. Large diameter fan, possibly with double speed, should be installed in order to adapt air movement to temperature level and quantity of product stored.

High and continuous ventilation rate are required to exhaust sulfur dioxide from room air following fumigation.

The greatest change that takes place in grapes in storage is loss of water. The first noticeable effect is drying and browning of stems and pedicels. This effect becomes evident with a loss of only 1 to 2% of the weight of the whole bunch. When the loss reaches 3 to 5%, the fruit loses its turgidity and softens.

Maintaining relative humidity of 92 to 95% in grape storage is often a problem especially at the beginning of the storage season when the rooms are being filled with dry lugs. Using large cooler (aeroevaporator) surface that means a minimum specific surface of 30 cm^2/m^3 of cold storage room, with a specific power of 0.12 kW/m^2, it is possible to have an optimal DT of 3°C. The use of water for defrosting the cold surface increases the relative humidity inside the storage room despite humidification increase the risk of liquid water presence on the berries surface. For this reason this defrosting technique is not advisable in cold storage

rooms for grape. The most usual system to keep high grapes turgor during the long term storage is to pack the bunches in a plastic bag; in this way respiration heat removal results more difficult but relative humidity inside the bag will be close to saturation point. In order to avoid product reheating, inside the plastic bag, air velocity in the storage room have to be increased to 0,2÷0,3 m/s.

In Developing Countries where the potential for investment is low, cold room storage is sometime impossible to propose. Since the storage requirements of table grapes are low temperature and high relative humidity, the technique called "evaporative cooling" can represent a simple, low cost technique for removing heat from grapes. The reduction of temperature is only partial, down to 15-17°C depending on the kind of construction and the outside temperature and relative humidity. The principle is to close the grapes, or other fruits, in an environment where the walls are done by water absorbing materials such as straw or bricks. The walls are wetted with water which, depending on the outside temperature and relative humidity, evaporates cooling down the storage environment which keeps even a high level of relative humidity (Fig.25). The major requirement of this system is the availability of water.

Another simple technique, depending on outside atmosphere conditions, is the "ventilated wet air" consisting in a room in which a couple of fans are located on opposite walls, one pushing the air from outside inside and the other, on the opposite wall, removing air from inside to outside (exhaust). The box of table grapes can be placed over the pallets on the floor of the room, which is successively wetted completely with a thin layer of water. During the night, when the temperature is down and relative humidity is high, the fans work at low speed creating a continuous flow of air. During the day, when the temperature starts to rise, the floor is wetted and the fan work at high speed to accelerate the water evaporation from the floor, cooling down the storage atmosphere (Fig.26).

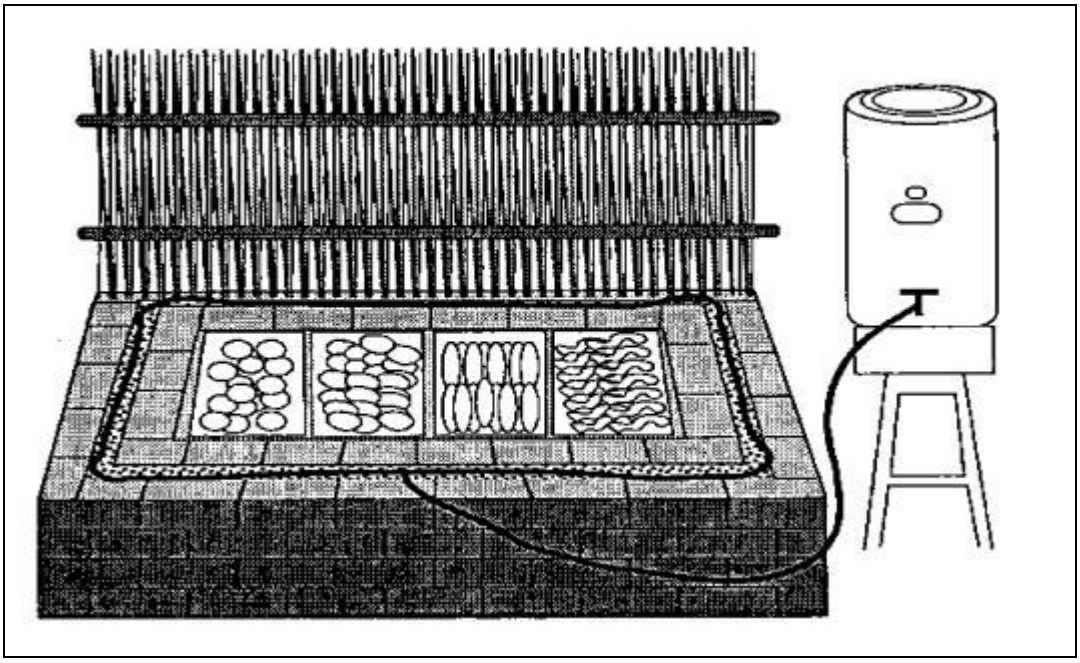

Figure 25. Evaporative cooling can be used for table grapes storage in certain areas.

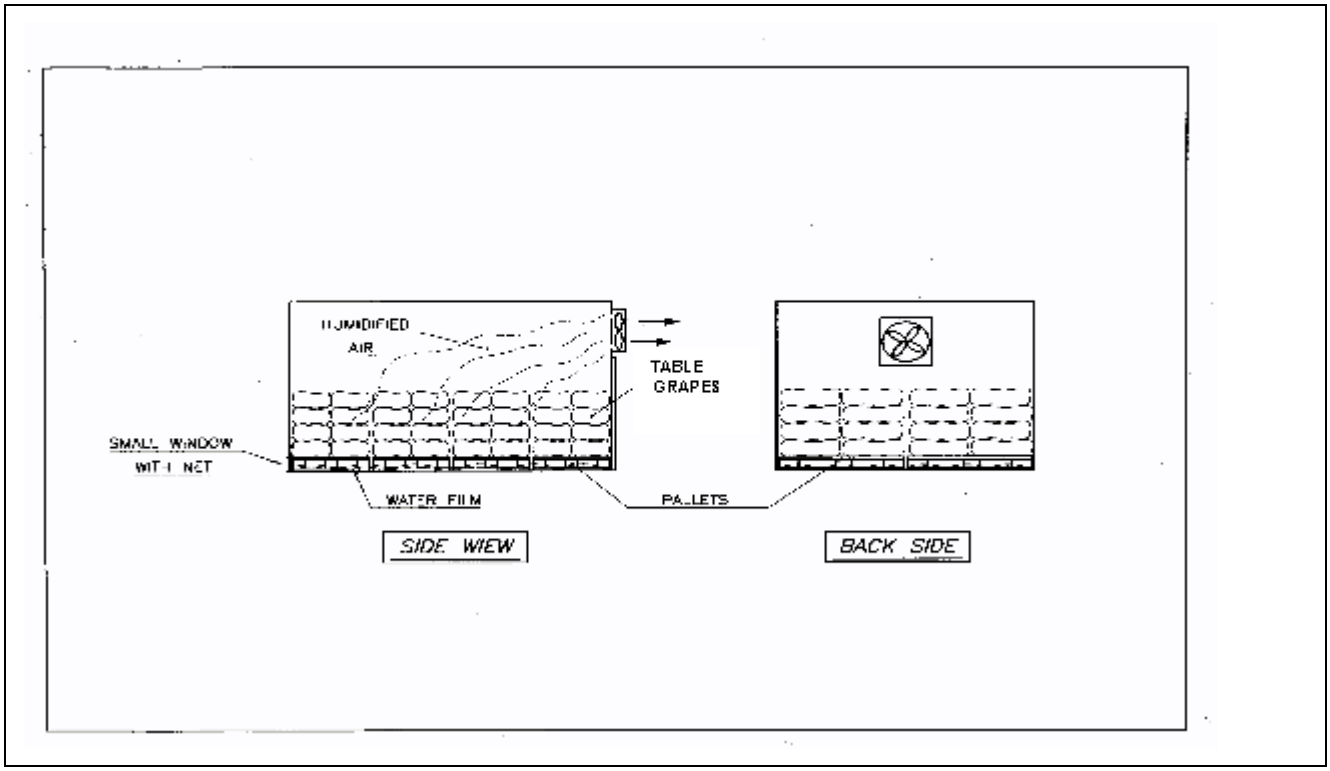

Figure 26. Similar wet air cooled can be used for table grapes storage in certain areas.

Modified atmospheres

Modified or controlled atmospheres (CA) are not used for industrial application in table grape packinghouse. The use of CA condition matched with sulphur dioxide fumigation has shown that CA alone does not control decay but fruit treated with $S0_2$ have been stored in good condition.

2.3 Shipping

The selection of transport system and right temperature level is not enough to ensure the success of grape transport that depends on many factors like the initial temperature, the refrigeration power, the air circulation system efficiency, quantity of grape and package adopted. For best results, temperatures should be maintained as close as possible to that level of the storage temperature. However to reduce the risk of freezing injury of grape, especially of packages located close to the cold air outlet, the thermostat setting (temperature control) should be set above not lower than 0°C. .

Grape should be loaded in truck trailer or container at the optimum temperature level and this level should be strictly maintained in order to preserve the grape quality during the transport period. Adequate cooling rate could not be obtained using the truck refrigeration system that is generally designed to hold the product loading temperature. In order to maintain the temperatures uniform throughout the load with a variation of ±0.5 °C, leakage from the insulated surface or from the doors gasket, long exposure to sun radiation, inadequate air circulation should be avoided because they produce dangerous and local increasing of grape thermal level. Horizontal airflow refrigeration system is the most common for air circulation in van-truck. It could be increased with channels, ducts or local vents that improve air distribution and circulation trough the stacked product especially far from the refrigerant i.e. close to the door. In conventional van-truck it is necessary to prevent obstruction of the discharge air duct and to ensure the air suction by the air-refrigerant fans. For this reason it is advisable to use a spacer between the front of the van container and the first row of pallet of

the van or container. The pallets have to be loaded tightly, front to rear in the van containers. The presence of loose space among pallets could cause falling of packages with product damage, and obstruction of the air flow (Fig. 27).

Figure 27. Air distribution systems in truck trailers for table grapes.

2.4 Pest control

Medium and long-term storage of table grapes is possible not only because of the improved refrigeration practices but also because of the development of effective fumigation practices to control decay. Long-keeping varieties, ie Emperor, Ribier, and Calmeria, Italia ecc. further contribute to the longterm storage of this commodity.

<u>$S0_2$ fumigation to control decay</u>

The main fungus causing decay of grape during the storage at 0°C is *Botryris cinerea* Pers. This fungus is capable to grow at this storage temperature. Spores of this mould are killed by the fumigation if they are present on the surface of the berries. but if the infection started in the vineyard before harvest SO_2 (sulfur dioxide) fumigation is unable to disinfect the grapes.. In fact SO_2 inactivates spores and reduces their growing rate, so in infected berries the mould continues the development (in relation to the storage temperature) and it could became visible in few hours after removal of SO_2 from storage environment (room or single package). SO_2 fumigation reduces the mould distribution inside the package due to its action on the spores and it prevents the formation of 'nests' of mouldy berries.

<u>$S0_2$ fumigation to maintain stem condition</u>

Stem color is greatly affected by SO_2 fumigation. SO_2 presence in the storage room avoids stem browning and give it a light green or amber color. After long term storage stem and

pedicel result much more elastic than without fumigation, so it reduces berries detachment during the transport.

Fumigation methods

Table grapes may be fumigated in storage room, in the transport vehicle, or within individual packages. Various combinations of these methods also may be used. Fumigation in transport vehicle is more complex to remove SO_2 from the internal trailer or container atmosphere before door opening or during the transit.

The minimum toxicant concentration and the time required to perform this action is generally considered 100 ppm for 60 min. This means that the same action could be performed using double concentration for half hour or the opposite. Maturity in term of sugar percentage in the juice, grape phisiological condition at harvesting time represent the main factors that affects this choice.

In South Italy storage room, table grapes generally are fumigated using a concentration of 0.2÷0.3 % $S0_2$ of room volume for 15÷20 min, followed by periodically applications (7-10 days) of 0.1÷ 0.2 % $S0_2$ for 15 to 20 minutes. Concentration and time adopted for fumigations depends on the particular weather conditions during the harvesting time (September-December). Rapid alternance of high and low temperature and wet weather conditions (high relative humidity or rainfall) increase the risk of *Botrytis* attack, so it is necessary to dry the berries surface and as soon as possible to fumigate the bunches in order to kill the spores eventually present on berries surface.

Longer time are required for lower concentration, some experience reports good results using fumigation with 0.01÷0.02 % $S0_2$ for 60 to 120 min. Automatic control equipment has been developed to maintain storage atmospheres that contain 20 ppm $S0_2$ over periods of three or more months. Grapes stored in such an atmosphere absorb 10-15 ppm $S0_2$. More recent work has shown that $S0_2$ concentrations of 7-10 ppm in the room atmosphere provide satisfactory decay control without excessive $S0_2$ injury.

Gas distribution should be done quickly and uniformly in the storage room volume. Nozzles uniformly distributed on the ceiling could guarantee uniform distribution. Most common is the installation of one nozzle in front of each continuous running fan present in the cold storage room. Proper pallet alignment and proportionate fan capacity that guarantee uniform air distribution are required. Gas penetration in the package should be improved reducing to the minimum the free volume around or over the pallet in order to avoid that the gas could by-pass the channels between the pallets and though the package.

In large cold storage room gaseous $S0_2$ is generated by liquid sulfur dioxide that is vaporized using hot water and it flows to the storage room through the delivery line. Precaution must be adopted to provide enough air flow to mix the pure gas before it reaches the fruit. Large amount of $S0_2$ can be released in few second using this system.

In order to treat all the bunches in the package, the air in contact with the berries should be moved, so in the cold storage rooms fans should be preset for continuous functioning during the fumigation. At the end of the fumigation, the $S0_2$ is removed from the storage room either with an exhaust fan or by dissolution of the gas in the water depending on local regulation.

Other factors that may influence the selection of $S0_2$ concentration are the relative humidity in the storage room and the type of package used. High relative humidity (90 to 95%) like those required in cold storage rooms for table grape and the use of wooden lugs, due to the absorption, reduce the effective $S0_2$ concentration in the storage atmosphere.

Decision about the $S0_2$ dosage should be taken considering the grape potential decay that depends on the weather conditions in the last days before the harvest.

The best SO_2 removing system in terms of efficiency and environmental impact consists of atmosphere washing system. It is a tower connected to the cold storage room by pipes. A low power centrifugal pump, installed at the base of the tower, provides the closed cycle

circulation in the tower of the atmosphere containing SO_2 (from the bottom) against water (raining from the top). SO_2 is removed from the atmosphere by mean the solubilization in the water. Furthermore, the use of water in closed cycle permits enrichment of the ambient of water vapour and therefore maintains a high hygrometric level (close to saturation) in the storage room (Fig.28).

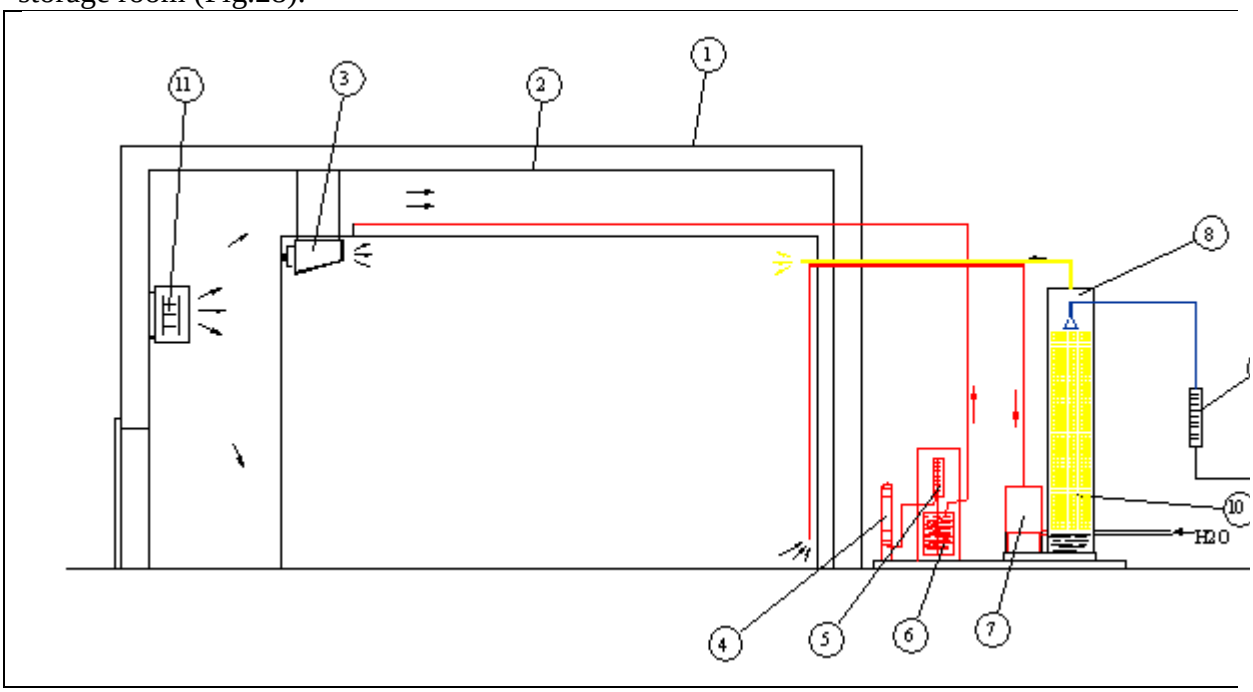

Figure 28. Typical installation for grape sulphure dioxide fumigation. 1- Cold storage room (in not sealed and adequately protected require jacket system); 2- Jacket system; 3-Addition fan for air circulation; 4- SO_2 tank; 5- SO_2 dosimeter; 6- SO_2 vaporizator; 7- fan; 8- air inlet; 9-water flow meter; 10 air washing tower.

SO_2 readily forms a corrosive acid in combination with water so all the metal surfaces should be in stainless steel or should be protected. The internal surface of cold storage rooms, built with sandwich panel should be protected with epoxy resins . Gas tight doors and fans should be in stainless steel, air cooler in stainless steel or normal cooler treated with tin plate. Interesting for Developing Countries, in order to adapt old storage rooms to SO_2 fumigation the jacket system could be adopted. Using this system the following advantages are obtained:

- refrigeration of table grape is indirect, thus it is possible to reach high relative humidity levels;
- easy to manage
- different size plastic room can be created and placed in one single cold room

Table grapes are stored within the polyester wrappers placed inside normal cold-stores and the refrigeration of the product occurs indirectly through the walls of the wrappers and not by effect of direct ventilation onto the fruit. The jacket system permits the division of large refrigerated space into several cells (wrappers) of small capacity that give the opportunity to improve efficiency of loading and unloading operations. The main parts of the plant are: sulfur dioxide dosimeter, SO_2 gasificator generally based on hot water, groups of fans to distribute SO_2 and to circulate cold air across the product, SO_2 removing system similar to the one above described based on water dissolution. The foregoing discussion of storage fumigation was based primarily on practices followed in Italy and United States. Fumigation procedures in other countries, such as South Africa, include the continuous exposure of table grapes to low concentrations of $S0_2$ in storage.

In-package fumigation

Several SO_2-producing compounds have been developed for in-package fumigation of table grapes. This technique is mainly useful for table grape subjected to long term shipment but when are not available plant adequate for fumigation it result the best solution for long term storage of table grape.

The SO_2 generators contain sodium bisulphite between layers of polyethylene coated paper. The generators are placed at the top of the box when the grapes are packed and provide protection of the fruit for as long as three months. The generators are generally used with bunches packed in polyethylene bag in order to prevent SO_2 dispersion in the storage environment. The release of SO_2 depends on the relative humidity inside the bag and so it is hard to obtain standard concentration in all the boxes. This is the reason because it is easy to find SO_2 injury in the berries and in the stem.

References

1. ASHRAE. 1994. ASHRAE Handbook & Product Directory, Applications volume. Amer. Soc. Heating, Refrigeration and Air-conditioning Engineers, Atlanta, GA.
2. Bellincontro A., DeSantis D., Mencarelli F., Nardin C., Villa I. 2002. Nuova tecnologia di appassimento di uve Trebbiano e Malvasia, caratteristiche qualitative e aromatiche in confronto con il sistema tradizionale. Industria delle Bevande 182:538-545.
3. Bellincontro A., De Santis D., Botondi R., Villa I., Mencarelli F.2003. Quality Characteristics and Volatile Compounds of Malvasia, Trebbiano, and Sangiovese Grapes as Influenced by the Postharvest Dehydration Rate of Berries**.** Journal of Science and Food Agricultural. (article in press).
4. Bonomi F., 1973, Preservation of table grapes with indirect refrigeration using plastics bags, Freddo, 27 (4) 31-35.
5. Burton, W. G. 1982. Postharvest physiology of food crops. Longman, London & New York, 339 pp.
6. Cappellini, R.A., Ceponis, M.J. 1984. Postharvest losses in fresh fruit and vegetables. Postharvest pathology of fruit and vegetables: postharvest losses in perishable crops. Edited by Harold E. Moline, Northeastern Regional Research Project, Berkeley, California.
7. Crisosto, C.H., Crisosto, G.M. 2002. Understanding American and Chinese consumer acceptance of `Redglobe' table grapes. Postharvest Biology and Technology 24: 155–162.
8. Crisosto, C.H., Smilanick, J.L. Table Grapes Postharvest Quality Maintenance Guidelines.
9. Debney, H. G., K. J. Blacker, B. J. Redding, and J. B. Watkins. 1980. Handling and storage practices for fresh fruits and vegetables - Product Manual. Aust. United Fresh Fruit & Veg. Assn., Brisbane, Australia.
10. Dennis, C. 1983. Postharvest pathology of fruits and vegetables. Academic Press, London, UK, 264 pp.
11. Doymaz, I., Pala M. 2002. The effect of dipping pretreatments on air-drying rates of the seedless grapes. Journal of Food Engineering 52: 413-417.
12. Duckworth, R. B. 1966. Fruits and Vegetables. Pergammon Press, Oxford, 306 pp.
13. Fregoni, M., 1998. Viticoltura di qualità. Edizioni l'Informatore Agrario.
14. Friend, J. and M. J. C. Rhodes (editors). 1981. Recent advances in the biochemistry of fruit and vegetables. Academic Press, New York, 278 pp.
15. Ginsburg L., Combrink J.C., Truter A.B., 1978, Long and short term storage of table grapes. International Journal of Refrigeration, 1 (3) 137-142.
16. Haard, N. F. and D. K. Salunkhe (editors). 1975. Symposium: Postharvest biology and handling of fruits and vegetables. me AVI Publ. Co., Westport, CT, 193 pp.
17. Hedberg P.R., 1979, Table grape storage. Food Technology in Australia, 31 (2) 80-81.

18. Hulme, A. C. (editor). 1970. The Biochemistry of Fruits and their Products, Vol. 1. Academic Press, New York, 620 pp.
19. Hulme, A. C. (editor). 1971. The Biochemistry of Fruits and their Products, Vol. 2. Academic Press, New York, 788 pp.
20. Hultin, H. O. and M. Milner (editors). 1978. Postharvest Biology and Biotechnology. Food and Nutrition Press, Inc., Westport, CT, 460 pp.
21. I,ieberman, M. (editor). 1983. Postharvest Physiology and Crop Preservation. Plenum Publ. Corp., New York, 575 pp.
22. IvanchenkoV.I., Kantsaeva U.I., Rutovskaya I.L., 1994 Respiratory gaseous exchange of grape berries during long-term storage, Vinogradstvo-i-Vinodelie, No. 1, 69-72.
23. Jasa B., Kopec K., Kandeva R., Svejcar V., Postbiegl E., 1969, Storage of table grapes, Acta-Universitatis-Agriculturae-Facultas-Agronomica,-Brno; 17 (3) 609-616.
24. Jeffrey, J. J. 1977. Engineering principles related to the design of systems for air cooling of fruits and vegetables in shipping containers. Proc. 29th Int'l. Conf. on Handling Perishables Agricultural Commodities, Mich. State Univer. pp. 151-164.
25. Kader, A.A. 1992. Postharvest technology of horticultural crops, 85-92 Univ. Calif. Div.Agric.Nat.Res.Publ. 3311. Berkley, CA.
26. Kasmire, R. F. and F. G. Mitchell. 1974. Perishables Handling Issue 36, 14 pp., Univ. of Calif. Coop. Ext.
27. Kasmire, R. F. and J. E. Parson. 1979. Operator's guide to effective vacuum cooling. Univ. of Calif. Coop. Ext. (unnumbered).
28. Kochurova A.I., Karpova T.N., 1974, A combined action of sulphur dioxide and carbon dioxide on mould growth, Vinodelie-i-Vinogradarstvo-SSSR; No. 6, 36-38.
29. Korobkina Z.B., Kochurova-AI, 1977, Transport and storage of grapes. Perevozka i khranenie vinograda. Book, 80pp.
30. Lipton, W. J. and j. E. Harvey. Compatibility of fruits and vegetables during transport in mixed loads. MRR-1070, USDA, 1977.
31. Lutz, J. M. and R. E. Hardenburg. 1968. The commercial storage of fruits, vegetables, and florist and nursery stocks. U.S. Dept. Agr., Agr. Handbook No. 66, 94 pp.
32. Marcellin P., 1977, Controlled atmosphere transport of fruits and vegetables, Revue-Generale-du-Froid; 68 (1) 15-21.
33. Mencarelli F., Massantini R., Lanzarotta L., Botondi R. 1994. Accurate detection of firmness and color changes in the packing of table grapes with paper dividers. J. of Hort. Sci. 69(2):299-304.
34. Mitchell, F. G. and R. F. Kasmire. 1978. Perishables Handling Issue 39, 12 pp., Univ. of Calif. Coop. Ext.
35. Mitchell, F. G., R. Guillou, and R. A. Parsons. 1972. Commercial cooling of fruits and vegetables. Univ. of Calif. Agr. Exp. Sta. Ext. Serv. Manual 43, 44 pp.
36. Nelson K.E., Ahmedullah M., 1972, Effect of type of in-package sulfur dioxide generator and packaging materials on quality of stored table grapes. American-Journal-of-Enology-and-Viticulture; 23 (2) 78-85.
37. Novello, V., 1999. An overview of table grape production in Italy. Proceedings of the 5th Australian Table Grape Technical Conference. Murray Valley Table Grape Growers Council.
38. Pantastico, Er. B. (editor). 1975. Postharvest Physiology, Handling and Utilization of Tropical and Subtropical Fruits and Vegetables. The AVI Publ. Co., Westport, CT, 560 pp.
39. Payan M., 1972, Storage trials with table grapes, Vignes-et-Vins; 206: 23-24.
40. Pilipenko F.G. , 1980, Manufacture of table wine containing residual sugar, Vinodelie-i-Vinogradarstvo-SSSR, No. 8, 28-30.

41. Rij, R. E., J. F. Thampson, and D. S. Farnham. 1979. Handling, precooling, and temperature management of cut flower crops for truck transportation. Univ. of Calif. Coop. Ext. Leaf. 21058.
42. Ryall, A. L. and W. J. Lipton. 1979. Handling, transportation and storage of fruits and vegetables. Vol. 1. Vegetables and Melons, 2nd edition. The AVI Publ. Co., Westport, CT, 588 pp.
43. Ryall, A. L. and W. T. Pentzer. 1982. Handling, transportation and storage of fruits and vegetables. Vol. 2. Fruits and Tree Nuts. m e AVI Publ. Co., Westport, CT, 610 pp.
44. Salunkhe, D. K. 1975. Storage, processing, and nutritional quality of fruits and vegetables. CRC Press, Boca Raton, FL, 166 pp.
45. Salunkhe, D. K. and B. B. Desai. 1984. Postharvest biotechnology of fruits. Volume I. CRC Press, Boca Raton, FL, 184 pp.
46. Salunkhe, D. K. and B. B. Desai. 1984. Postharvest biotechnology of fruits. Volume II CRC Press, Boca Raton, FL, 168 pp.
47. Salunkhe, D. K. and B. B. Desai. 1984. Postharvest biotechnology of vegetables. Volume I. CRC Press, Boca Raton, FL, 232 pp.
48. Salunkhe, D. K. and B. B. Desai. 1984. Postharvest biotechnology of vegetables. Volume II. CRC Press, Boca Raton, FL, 288 pp.
49. Seelig, R. A. (editor) - Various dates. Fruit and vegetables facts and pointers. A series of reports on each of 81 commodities. United Fresh Fruit & Vegetable Association, Alexandria, VA.
50. Smit C.J.B., Cancel H.L., Nakayama T.O.M., 1971, Refrigerated storage of muscadine grapes, American-Journal-of-Enology-and-Viticulture; 22 (4) 227-230.
51. Thompson, J. F. and R. F. Kasmire. 1981. An evaporative cooler for vegetable crops. Cali Agr. 35(3&4):20-21.
52. Wills, R.H.H.,T. H. Lee, D. Graham, W. B. McGlasson, and E. G. Hall. 1981. Postharvest: An introduction to the physiology and handling of fruit and vegetables. AVI Publ. Co., Inc., Westport, CT, 163 pp.
53. http://winegrapes.tamu.edu Table Grapes: A Potential Alternative CropLarry A. Stein and George Ray McEachern Texas Cooperative Extension.
54. http://viticulture.hort.iastate.edu Nonnecke, G. 2002. Pruning, Training, and Grape Training, and Grape Canopy Management. Iowa Grape Grower conference.
55. http://www.fas.usda.gov World Table Grape Situation and Outlook.
56. http://www.conerpo.com Fruttilandia.
57. http://www.calraisins.org California Raisins Production.
58. http://www.unaproa.it Unione Nazionale delle Organizzazioni dei Produttori Ortofrutticoli, Agrumari e di frutta in guscio.
59. http://postharvest.ucdavis.edu/produce/producefacts/http://www.uga.edu/fruit/index.html, Mark Rieger's Fruit Crops.