codex alimentarius commission

FOOD AND AGRICULTURE ORGANIZATION OF THE UNITED NATIONS

WORLD HEALTH ORGANIZATION

JOINT OFFICE: Viale delle Terme di Caracalla 00100 ROME Tel: 39 06 57051 www.codexalimentarius.net Email: codex@fao.org Facsimile: 39 06 5705 4593

Agenda Item 5 **CX/PFV 02/10**
August 2002

JOINT FAO/WHO FOOD STANDARDS PROGRAMME
CODEX COMMITTEE ON PROCESSED FRUITS AND VEGETABLES

21st Session,
San Antonio, Texas, U.S.A., 23-27 September 2002

METHODS OF ANALYSIS FOR PROCESSED FRUITS AND VEGETABLES

BACKGROUND

CODEX COMMITTEE ON PROCESSED FRUITS AND VEGETABLES

1. The 19th Session of the Codex Committee on Processed Fruits and Vegetables (CCPFV) considered methods of analysis necessary to determine compliance of products with the relevant Codex standards for processed fruits and vegetables. Due to time constraints, the Committee could not consider these methods fully and therefore, it agreed to circulate the revised list along with additional information for comments by governments and interested international organizations in observer status with Codex. It also agreed that the revised list would be considered by the Committee at its 20th Session in light of comments received before being submitted to the Codex Committee on Methods of Analysis and Sampling (CCMAS) for endorsement.[1]

2. The 20th Session of the CCPFV decided to forward methods of analysis for endorsement by the 23rd session of the CCMAS along with the additional information provided in the written comments submitted to the Committee at that meeting.[2]

CODEX COMMITTEE ON METHODS OF ANALYSIS AND SAMPLING

3. The 22nd and 23rd sessions of the CCMAS endorsed a number of methods of analysis for aqueous coconut products, kimchi and pickles and requested clarification from the Committee on some proposed methods that were temporarily endorsed (TE) or not endorsed (NE). However, the 23rd CCMAS did not take any decision on the methods proposed for endorsement by the CCPFV in regard to other processed fruits and vegetables which were returned to the Committee for further consideration. The CCMAS also reiterated its earlier question concerning the determination of maximum level for tin in the Draft Standard for Pickles when finalized the text.[3]

4. The 23rd CCMAS also noted that it would not be procedurally correct to endorse a method before relevant Codex provisions had been established. In view of this, those methods of analysis corresponding to products which are not being considered by the CCPFV have been deleted from the previous list agreed to by the 20th session of the CCPFV. They will be presented to the Committee as new work is undertaken on the commodities they apply to in the subsequent sessions of the CCPFV.

5. In addition, the CCMAS at its 20th Session advised the commodity committees to consider replacing Codex Methods of Analysis and Sampling (CAC/RMs) with more modern methods as appropriate and to replace the CAC/RM numbers with the original literature references, if possible.[4] The 21st CCMAS further recommended that when the original reference of a CAC/RM was available, this reference should replace the CAC/RM number, and when the original reference was not available, the full text of the method should be included in *Codex Alimentarius* Volume 13 and the CAC/RM number reference deleted[5]. The Codex Alimentarius Commission at its 22nd Session agreed to the abolition of the CAC/RM Numbering System as recommended by the CCMAS[6].

---

1 ALINORM 99/27 para. 70
2 ALINORM 01/27 para. 41
3 ALINORM 99/23 para. 55, Appendix III Part 1/B and ALINORM 01/23, para. 98, Appendix IV, Part I/E.
4 ALINORM 97/23, para. 52.
5 ALINORM 97/23A, para. 44.
6 ALINORM 97/37, para. 145

6. When considering methods of analysis as listed in Appendices II and III-Parts 1 and 2, the Committee should give due consideration to the *General Criteria for the Selection of Methods of Analysis* as set out in the *Principles for the Establishment of Codex Methods of Analysis.*[7] For ease of reference, this section is reproduced hereafter as Appendix I. The Committee is also invited to take into account the provisions contained in the Procedural Manual of the Codex Alimentarius Commission in particular the *Relations between Commodity Committees and General Committees (Methods of Analysis and Sampling).*[8]

7. It is also noted that where there is a specification or labelling requirement in the Standard, it is necessary to recommend a method(s) for the provision. However, if there is no specification or labelling requirement, there is no need to select methods of analysis.

8. Attached is the list of methods of analysis and sampling being recommended for inclusion in processed fruits and vegetables. They are distributed as follows:

(a) **Appendix II** Methods of Analysis for Processed Fruits and Vegetables as proposed by the Drafting Group on Methods of Analysis and Sampling at the 19th CCPFV;

(b) **Appendix III**
Part 1: Methods of Analysis and Sampling for Processed Fruits and Vegetables as endorsed by CCMAS;
Part 2: CAC/RM numbers and their compatible references.
Part 3: Explanatory Notes on the decisions of the CCMAS and recommendations of the Drafting Group on Methods of Analysis and Sampling established at the 19th CCPFV;

(c) **Appendix IV** Methods of analysis previously recommended as CAC/RMs or stated in the individual standards for processed fruits and vegetables.

ACTIONS TO BE TAKEN BY THE CCPFV

9. The Committee is invited to revise the methods of analysis listed in Appendices II and III-Parts 1 and 2 and:

(a) propose methods of analysis for the combinations of standard/provision (specification and/or labelling requirement) requiring them. In doing so, the Committee should clearly indicate if the revision corresponds to an update of the reference or to a new method which replaces the current one in force;

(b) provide further clarification on those methods of analysis which were temporarily endorsed or not endorsed by the CCMAS;

(c) identify which CAC/RMs should be deleted or replaced by the original reference available and report to CCMAS accordingly.

The methods agreed to be used for the revised standards will need to be submitted to CCMAS for endorsement and will supersede the methods currently in force for the products to which they apply.

---

7 Procedural Manual of the Codex Alimentarius Commission, 12th Edition, pages 64-74.
8 Procedural Manual of the Codex Alimentarius Commission, 12th Edition, pages 86-88.

APPENDIX I

PRINCIPLES FOR THE ESTABLISHMENT OF CODEX METHODS OF ANALYSIS

GENERAL CRITERIA FOR THE SELECTION OF METHODS OF ANALYSIS
(Extract from the Procedural Manual 12th Edition)

(a) Official methods of analysis elaborated by international organizations occupying themselves with a food or group of foods should be preferred.

(b) Preference should be given to methods of analysis the reliability of which have been established in respect of the following criteria, selected as appropriate:

i) specificity

ii) accuracy

iii) precision; repeatability intra-laboratory (within laboratory), reproducibility inter-laboratory (within laboratory and between laboratories)

iv) limit of detection

v) sensitivity

vi) practicability and applicability under normal laboratory conditions

vii) other criteria which may be selected as required.

(c) The method selected should be chosen on the basis of practicability and preference should be given to methods which have applicability for routine use.

(d) All proposed methods of analysis must have direct pertinence to the Codex Standard to which they are directed.

(e) Methods of analysis which are applicable uniformly to various groups of commodities should be given preference over methods which apply only to individual commodities.

General Criteria for the Selection of Methods of Analysis using the Criteria Approach

In the case of Codex Type III methods, method criteria may be identified and values quantified for incorporation into the appropriate Codex commodity standard. Method criteria which are developed will include the criteria in section Methods of Analysis, paragraph (c) above together with other appropriate criteria, e.g., recovery factors.

APPENDIX II
Methods of Analysis as proposed by the Drafting Group on Methods of Analysis and Sampling
(19th CCPFV, Washington D.C., U.S.A., 16-20 March 1998)

STANDARD	PROVISION	LEVEL	METHOD	PRINCIPLE	STATUS	TYPE
Processed vegetables	Butter or margarin		AOAC 970.51	Gas chromatography		
Processed fruits and vegetables	Calcium		AOAC 968.31[1,2]	Complexometric titrimetry		
			ISO method[1]			
Processed fruits and vegetables (except canned tomatoes and canned mushrooms)	Drained weight		AOAC 968.30[2]	Sieving		I
Processed fruits and vegetables (except pickled cucumbers)	Fill of containers (glass containers)		CAC/RM 46-1972[3]	Weighing	E[4]	I
Processed fruits and vegetables (except pickled cucumbers)	Fill of containers (metal containers)		ISO 90.1:1986[3]	Weighing		I
Processed fruits and vegetables	Packing medium	≥ 10ºBrix Canned berry fruits (raspberry, strawberry)	AOAC 932.12	Refractometry		
			ISO 2173:1978		E[4]	I
Processed fruits and vegetables	pH		AOAC 981.12	Potentiometry		
			ISO 11289:1993			

1 See Note 16.
2 See Note 11.
3 See Note 15 and Appendix III for the description of the method.
4 14th CCMAS (Budapest, Hungary, 26-30 November 1984, ALINORM 85/23, App. II, Tables II and IV).

STANDARD	PROVISION	LEVEL	METHOD	PRINCIPLE	STATUS	TYPE
Processed fruits and vegetables	Sodium chloride		AOAC 971.27 (Codex general method)	Potentiometry	E[5]	II
			ISO 3634:1979			
Processed fruits and vegetables	Soluble solids		AOAC 932.14C	Refractometry		I
			ISO 2173:1978		E[4]	I
Processed fruits and vegetables	Sulphite		AOAC 990.26			
			ISO 522:1981			
Processed fruits and vegetables	Total solids	≥ 9 % (9ºBrix) (canned applesauce)	AOAC 932.12	Refractometry		
			ISO 2173:1978		E[4]	I
Processed fruits and vegetables	Total solids		AOAC 920.151	Gravimetry		
Canned berry fruits (strawberry)	Mineral impurities	≤ 300 mg/kg	AOAC 971.33[2]	Ashing		I
Canned tomatoes	Drained weight		CAC/RM 37-1970[6]	Sieving	E[3]	I
Canned tomatoes	Mould count	Not detected	AOAC 965.41	Howard mould count		I
Canned vegetables (green beans and canned wax beans)	Tough string	*No specification* (only definition)	CAC/RM 39-1970[7]	Stretching	E[8]	I

5 See Codex Alimentarius Volume 13.
6 See Note 12 and Appendix III for the description of the method.
7 See Note Note 13 and Appendix III for the description of the method.
8 15th CCMAS (10-15 November 1986, ALINORM 87/23, App. III, Table III).

STANDARD	PROVISION	LEVEL	METHOD	PRINCIPLE	STATUS	TYPE
Canned vegetables (green peas)	Alcohol insoluble solids	≤ 21 %	AOAC 938.10[2]	Sieving		I
Canned vegetables (green peas)	Distinguishing types of peas		CAC/RM 48-1972[9]	Visual inspection	E[8]	I
Canned vegetables (mature processed peas)	Total solids	≥ 19.5% of the weight of distilled water at 20°C which the sealed container will hold when completely filled	AOAC 964.22	Vacuum oven		I
Canned vegetables (palmito)	Mineral impurities	≤0.1% m/m	ISO 762:1982 (confirmed 1992)	Gravimetry	E[8]	I
Jam, jellies and marmalades (jam (fruit preserves) and jellies	Mineral impurities	≤ 0.04 % (m/m)	AOAC 971.33[2]	Ashing		I
Pickled cucumbers	Acidity, total	0.4-3.5% as acetic acid	AOAC 942.15	Titrimetry		I
Pickled cucumbers	Mineral impurities	≤0.08% m/m	AOAC 971.33[2]	Sedimentation and filtration		I
Pickled cucumbers	Solids, soluble, salt free (in packing medium)	1.5%-14% (sweet-sour type); ≥14% (sweet type)				
Pickled cucumbers	Volume fill by displacement	≥ 53%	Methods I, II and III[10]	Displacement	E[4]	I
Processed tomato concentrates	Mineral impurities	< 60 mg/kg based on diluted product of 8% solids	AOAC 971.33[2]	Ashing	E[11]	IV

9 See Appendix III for the description of the method.
10 See Appendix III for the description of the method.
11 18th CCMAS (Budapest, Hungary, 9-13 November 1992, ALINORM 93/23, App. V)

STANDARD	PROVISION	LEVEL	METHOD	PRINCIPLE	STATUS	TYPE
Processed tomato concentrates	Tomato soluble solids	≥ 8%	AOAC 970.59	Refractometry		I

APPENDIX III
PART 1

METHODS OF ANALYSIS AND SAMPLING FOR CERTAIN PROCESSED FRUITS AND VEGETABLES
(as endorsed by CCMAS)

STANDARD	PROVISION	LEVEL	METHOD	PRINCIPLE	STATUS	TYPE
Aqueous Coconut Products	Moisture[1]	≤ 95% m/m	Subtracting total solids from 100			
Aqueous Coconut Products	Non-fat solids[1]	Varying levels	Subtracting total fats from total solids			
Aqueous Coconut Products	Sampling	-	CODEX STAN 233-1969[2]	-	E[3]	-
Aqueous Coconut Products	Total fats	Varying levels	AOAC 945.48G	Gravimetry (Röse-Gottlieb method	NE[4]	I
Aqueous Coconut Products	Total solids	Varying levels	AOAC 925.23A (IDF-ISO-AOAC method)	Gravimetry	NE[5]	I
Canned Bamboo Shoots	Drained weight and Net weight	drained wt/net wt ≥60%	AOAC 968.30	Gravimetry	E[6]	I
Canned Bamboo Shoots	Colour, flavour and texture		As described in Annex B to Appendix II of ALINORM 97/15	Organoleptic measurement	NE[7]	-
Canned Bamboo Shoots	pH	≥ 4.0; 4.0-4.6 (if acid is added)	AOAC 981.12 Follow the instruction for liquid and solid component mixtures (G(a)(1))	Potentiometry	E[8]	I
Canned Bamboo Shoots	Sampling		CODEX STAN 233-1969[2]	-	E[3]	-
Kimchi	Drained weight	≥ 80%	AOAC 968.30	Gravimetry	E[9]	I

1 12th CCASIA (Chiang Mai, Thailand, 23-26 November 1999, ALINORM 01/15, App. II)
2 See Note 1
3 8th CAC (Geneva, Switzerland, 30 June - 9 July 1971, ALINORM 71/31 paras. 87-90). See also Volume 13 of the Codex Alimentarius.
4 See Note 2
5 See Note 3
6 See Note 4
7 See Note 5
8 10th CASIA (Tokyo, Japan, 5-8 March 1996, ALINORM 97/15, App. II) and 21st CCMAS (Budapest, Hungary, 10-14 March 1997, ALINORM 97/23A, App. V, Part 2/D)

STANDARD	PROVISION	LEVEL	METHOD	PRINCIPLE	STATUS	TYPE
Kimchi	Mineral impurities	≤ 0.03% m/m	AOAC 971.33	Ashing	E[9]	I
Kimchi	Salt (sodium chloride)	1.0-4.0% m/m	AOAC 971.27 (Codex General Method)	Potentiometry (Determination of chloride, expressed as sodium chloride)	E[9]	II
Kimchi	Sampling	-	CODEX STAN 233-1969[2] In addition, the following applies:[10] (a) Samples shall be taken and stored in a protected cool place - from 0°C to 4°C so as to prevent deterioration of the sample. (b) Precautions shall be taken to protect the sample, the material being sampled, the sampling instruments, and the sample containers from extraneous contamination. (c) The sample shall be placed in clean dry glass containers with ait tight stoppers or closures. It shall be marked with full details of sampling, date of sampling, name of the vendor and other particulars of the consignment.	-	E[3]	-
Kimchi	Total acidity	≤ 1.0 % m/m	AOAC 942.15	Titrimetry	E[9]	I
Pickles	Acidity	Not specified	AOAC 942.15	Titrimetry	E[9]	I
Pickles	Acidity	Not specified	ISO 750:1981	Titrimetry	NE[11]	-
Pickles	Arsenic	≤ 1.0 mg/kg	AOAC 952.13 (Codex general method)	Colorimetry, diethyldithiocarbamate	E[9]	II

9 22nd CCMAS (Budapest, Hungary, 23-27 November 1998, ALINORM 99/23, App. III, Part 1/B)
10 11th CCASIA (Chiang Rai, Thailand, 16-19 December 1997, ALINORM 99/15, App. IV)
11 See Note 6.

STANDARD	PROVISION	LEVEL	METHOD	PRINCIPLE	STATUS	TYPE
Pickles	Arsenic	≤ 1.0 mg/kg	ISO 6634:1982	Spectrophotometry, silver diethyldithiocarbamate	E[9]	III
Pickles	Benzoic acid	≤ 250 mg/kg	ISO 5518:1978	Spectrophotometry	TE[12]	IV
Pickles	Drained weight	Not specified	AOAC 968.30	Gravimetry	E[9]	I
Pickles	Lead	≤ 1.0 mg/kg	AOAC 972.25 (Codex general method)	Atomic absorption spectrophotometry	E[9]	II
Pickles	Lead	≤ 1.0 mg/kg	ISO 6633:1984	Flameless atomic abosrption spectrophotometry	E[9]	IV
Pickles	Salt	Not specified	AOAC 971.27 (Codex general method)	Potentiometry (Determination of chloride, expressed as sodium chloride)	E[9]	II
Pickles	Salt	Not specified	AOAC 939.10	Volumetry, gravimetry, titrimetry (3 methods) (Determination of chloride, expressed as sodium chloride)	E[9]	III
Pickles	Sampling		CODEX STAN 233-1969[2]	-	E[3]	-
Pickles	Sorbates	≤ 1000 mg/kg	ISO 5519:1978	Spectrophotometry	TE[13]	IV
Pickles	Sulphur dioxide	≤ 30 mg/kg	ISO 5522:1981	Titrimetry followed by: gravimetry (high levels) nephelometry (low levels)	NE[14]	-

12 See Note 7.
13 See Note 8.
14 See Note 9.

STANDARD	PROVISION	LEVEL	METHOD	PRINCIPLE	STATUS	TYPE
Pickles	Sulphur dioxide	≤ 30 mg/kg	ISO 5523:1981	Colorimetry	NE[14]	-
Pickles	Tin	≤ 250.0 mg/kg	AOAC 980.19 (Codex general method)	Atomic absorption spectrophotometry	E[15]	II
Pickles	Tin	≤ 250.0 mg/kg	ISO 2447:1974		TE[15]	IV

[15] See Note 10

APPENDIX III
Part 2
CAC/RM Numbers and their compatible References

CAC/RM Reference[16]	Method	Current Reference
CAC/RM 36-1970[17]	Determination of Drained Weight - Method I	AOAC 968.30
CAC/RM 37-1970[18]	Determination of Drained Weight - Method II	-
CAC/RM 38-1970[17]	Determination of Calcium in Canned Vegetables	AOAC 968.31
CAC/RM 39-1970[19]	Tough String Test	-
CAC/RM 45-1972[20]	Determination of Proper Fill in lieu of Drained Weight	-
CAC/RM 46-1972[21]	Determination of Water Capacity of Containers	-
CAC/RM 47-1972[17]	Determination of Alcohol Insoluble Solids	AOAC 938.10
CAC/RM 48-1972[22]	Method of Distinguishing Type of Peas	-
CAC/RM 49-1972[17]	Determination of Mineral Impurities (Sand)	AOAC 971.33

16 See Appendix III for the description of the method.
17 See Note 11.
18 See Note 12.
19 See Note 13.
20 See Note 14.
21 See Note 15.
22 See Note 16.

APPENDIX II
PART 3
EXPLANATORY NOTES ON THE RECOMMENDATIONS OF THE WORKING GROUP ON METHODS OF ANALYSIS AND SAMPLING (19th CCPFV) AND THE CCMAS

Note 1	**Secretariat Note**: The CCMAS is elaborating sampling plans which will be applicable to all Codex commodity standards. In the meantime, the document in force is the FAO/WHO Codex Alimentarius Sampling Plans for Prepackaged Foods (AQL 6.5) CODEX STAN 233-1969 which applyes to processed fruits and vegetables unless otherwise specified.
Note 2	The CCPFVshould provide information on validation of the cited method for this application (23rd CCMAS, Budapest, Hungary, 26 February - 2 March 2001, ALINORM 01/23 App. IV-Part I/E).
Note 3	AOAC 925.23kA has been repealed and the CCPFV should provide information on validation of the cited method for this application (23rd CCMAS, Budapest, Hungary, 26 February - 2 March 2001, ALINORM 01/23, App. IV-Part I/E).
Note 4	The CCPFV should be informed that the CCMAS endorsed the AOAC method which appears to be identical to the method stated in ALINORM 97/15, App. II, Annex C (21st CCMAS, Budapest, Hungary, 10-14 March 1997, ALINORM 97/23A, App. V-Part 2/D).
Note 5	The CCPFV should be informed that items such as organoleptic measurements of colour, flavour and texture are not ordinarily considered as methods of analysis (21st CCMAS, Budapest, Hungary, 10-14 March 1997, ALINORM 97/23A, App. V-Part 2/D).
Note 6	The CCMAS did not endorse method ISO 750:1981 since there can only be one Type I method for the same provision (22nd CCMAS (Budapest, Hungary, 23-27 November 1998, ALINORM 99/27, App. III-Part 1/B).
Note 7	The CCPFV is requested to review more modern methods such as the liquid chromatographic method IFU 63 (1995) or the gas chromatographic method NMKL 103 (1984)/AOAC 983.16 which has been endorsed as a Type II Codex general method (22nd CCMAS, Budapest, Hungary, 23-27 November 1998, ALINORM 99/27, App. III-Part 1/B).
Note 8	The CCPFV is requested to review more modern methods such as the liquid chromatographic method IFU 63 (1995) or the gas chromatographic method NMKL 103 (1984/AOAC 983.16 which has been endorsed as a Type II Codex General Method (22nd CCMAS, Budapest, Hungary, 23-27 November 1998, ALINORM 99/27, App. III-Part I/B)
Note 9	The CCPFV is requested to review the Optimized Monier-Williams method (AOAC 990.28), which has been endorsed as a Type II Codex General Method (22nd CCMAS, Budapest, Hungary, 23-27 November 1998, ALINORM 99/27, App. III-Part I/B).
Note 10	The CCMAS requested the Committee to consider whether it is necessary to express the provision using four significant figures (22nd CCMAS, Budapest, Hungary, 23-27 November 1998, ALINORM 99/27, App. III-Part I/B).
Note 11	**Secretariat Note**: The CCPFV is proposing AOAC 968.30 as a general method for the determination of drained weight in processed fruits and vegetables (except for canned tomatoes). In view of the recommendation of the CCMAS (see para. 5 of CX/PFV 02/10) the Committee should inform CCMAS of the replacement of the CAC/RM number by the original literature reference (see para. 9c of CX/PFV 02/10). The same applies to CAC/RM 38-1970, CAC/RM 47-1972 and CAC/RM 49-1972 which now read AOAC 968.31, AOAC 938.10 and AOAC 971.33 respectively (see also Appendix II of CX/PFV 02/10).

Note 12	Recommendation of the Working Group on Methods of Analysis and Sampling (19th CCPFV, Washington D.C., U.S.A., 16-20 March 1998): 1. Revise section 2.1 Specifications for Circular Sieves to read: If total quantity of contents is less than ~~1.5 kg. (3 lbs)~~ *1 kg. (2 lbs)* use a sieve. 2. Revise fourth sentence of section 3. Procedure to read: Without shifting the contents, ~~so~~ incline the sieve *approximately 20º from the horizontal* to facilitate drainage . . . 3. Insert new sentence at the end of the paragraph: "This determination should be performed at 20ºC ±5ºC." 4. The instructions omit two important steps: (1) the weighing of the full container; and (2) the weighing of the dry empty container. Both weights are required to calculate the percentage drained weight (solid content) and/or the percent liquid. *The Committee needs to draft appropriate text for these procedures.* **Secretariat Note**: The proposed changes have already been introduced in the text and are highlighted accordingly (see Appendix III)
Note 13	Recommendation of the Working Group on Methods of Analysis and Sampling, 19th CCPFV (Washington D.C., U.S.A., 16-20 March 1998): Replace this method with French method. The CCPFV needs to include either the reference or the text of the method for consideration by the Committee and the CCMAS.
Note 14	Recommendation of the Working Group on Methods of Analysis and Sampling, 19th CCPFV (Washington D.C., U.S.A., 16-20 March 1998): This method should be eliminated.
Note 15	Recommendation of the Working Group on Methods of Analysis and Sampling, 19th CCPFV (Washington D.C., U.S.A., 16-20 March 1998): 1. Delete references to "metal containers". 2. Refer to ISO method 90-1 for determination of water capacity in metal containers. 3. Delete section 4.1. **Secretariat Note**: The proposed changes have already been introduced in the text and are highlighted accordingly (see Appendix III)
Note 16	Recommendation of the Working Group on Methods of Analysis and Sampling, 19th CCPFV (Washington D.C., U.S.A., 16-20 March 1998): Calcium in processed fruits and vegetables - An ISO and AOAC 968.31 are recommended. The CCPFV needs to identify the reference number of the ISO method.

APPENDIX IV

METHODS OF ANALYSIS PREVIOUSLY RECOMMENDED AS CAC/RMS OR STATED IN THE STANDARDS

CAC/RM 36/1970 DETERMINATION OF DRAINED WEIGHT

METHOD I - (based on AOAC Method)

1. DEFINITION

Drained weight expresses % solid content as determined by the procedure described below.

2. SPECIFICATIONS FOR CIRCULAR SIEVES

2.1 If the quantity of the total contents of the container is less than 1 kg (2 lb) use a sieve with a diameter of 20 cm (8 in).

2.2 If the quantity of the total contents of the container is 1.5 kg (3 lb) or more, use a sieve with a diameter of 30 cm (12 in).

2.3 The meshes of such sieves are made by so weaving wire as to form square openings of 2.8 mm by 2.8 mm[1].

3. PROCEDURE

Weight full can, open, and pour entire contents on circular sieve for which a tare has been established. Without shifting product, incline sieve so as to facilitate drainage. Drain 2 minutes, weight either drained solids or free liquid direct, and weight dry empty can.

4. CALCULATION AND EXPRESSION OF RESULTS

From weights thus obtained determine % m/m liquid and % m/m drained weight (solid content).

5. LITERATURE REFERENCE

AOAC (1965), 30.001: Drained weight.

[1] Ref. ISO Recommendation R 565; such sieves may be replaced by US sieves with No 8 Standard screen (size of opening 2.38 mm)

CAC/RM 37/1970
DETERMINATION OF DRAINED WEIGHT

METHOD II

1. DEFINITION

Drained weight expresses % solid content as determined by the procedure described below.

2. SPECIFICATIONS FOR CIRCULAR SIEVES

2.1 If the quantity of the total contents of the container is less than ~~1.5~~1 kg (~~3~~ 2 lbs) use a sieve with a diameter of 20 cm (8 in).

2.2 If the quantity of the total contents of the container is 1.5 kg (3 lb) or more, use a sieve with a diameter of 30 cm (12 in).

2.3 The meshes of such sieves are made by so weaving wire as to form square openings of 11.2 mm by 11.2 mm[2].

3. PROCEDURE

Remove lid from container, but in the case of a container with lid attached by double seam, do not remove or alter the height of the double seam. Tilt the opened container so as to distribute the contents over the meshes of a circular sieve which has previously been weighed or for which a tare has been established. Without shifting the contents, ~~so~~ incline the sieve approximately 20º from the horizontal ~~as~~ to facilitate drainage of the liquid. Allow to drain for two minutes. At the end of the two minutes draining period, ascertain the weight of the material while still on the sieve, allowing for the tare (or weight of the sieve). This determination should be performed at 20°C ± 5°C

4. CALCULATION AND EXPRESSION OF RESULTS

From weights thus obtained determine % m/m liquid and %m/m drained weight (solid content).

[2] Ref. ISO Recommendation R 565; such sieves may be replaced by US sieves 2 mesh (size of opening 11.3 mm).

CAC/RM 38-1970
DETERMINATION OF CALCIUM IN CANNED VEGETABLES
(AOAC Method)

1. PRINCIPLE OF THE METHOD

Complexometric titration of the calcium in the product after ashing and passage through ion exchange column with high phosphate capacity.

2. REAGENTS

The reagents used shall be of recognized analytical reagent quality.

2.1 H_2O redistilled from glass (preferable) or deonized H_2O

2.2 Potassium hydroxide - potassium cyanide solution

Dissolve 280 g KOH and 66 g KCN in 1 litre H_2O

2.3 Calcium carbonate - Primary standard grade, dried 2 hours at 285°C.

2.4 Hydroxynaphthol blue - Calcium indicator[3]

Store in dark. Use fresh supply of this indicator after one year.

2.5 Ascorbic Acid

2.6 5% Hydrochloric Acid

Mix 3 volumes concentrated HCl with 22 volumes H_2O.

2.7 10% Hydrochloric Acid

Mix 1 volume concentrated HCl with 9 volumes H_2O.

2.8 5% m/v Sodium Carbonate

2.9 Disodium dihydrogen ehtylenediamine tetraacetate (EDTA) standard solution 0.01M

Dissolve 3.72 g EDTA (at least 99% purity) in H_2O in 1000 ml volume flask and dilute to volume. Weight accurately enough $CaCO_3$ to give approximately 40 ml titration with 0.01 M EDTA and transfer to 400 ml beaker. Add 50 ml H_2O and enough 10% HCl to dissolve $CaCO_3$. Dilute to approximately 150 ml with H_2O and add 15 ml N NaOH, disregarding any precipitate or turbidity. Add approximately 200 mg hydroxynaphthol blue indicator and titrate from pink to deep blue end point, using magnetic stirrer. Add last few ml EDTA solution dropwise.

$$\text{Molarity EDTA solution} = \frac{CaCO_3\ (mg)}{EDTA\ (ml) \times 100.09}$$

3. APPARATUS

3.1 Titration stand - Fluorescent illuminated, such as Titra-Lite Precision Scientific Co., or equivalent.

3.2 Ion exchange column - Approximately 20 x 600 mm, fitted with coarse porosity sintered glass disk and teflon stopcock. Place 30-40 g moist Amberlite IR-4B resin (anion exchange resin with high phosphate capacity) in 600 ml beaker and exhaust with three 250 ml portions 5% Na_2CO_3 or NaOH. Wash with H_2O until excess base is removed. Treat resin with three 250 ml portions 5% HCl, mixing thoroughly after each treatment. Rinse with H_2O until colour is removed and transfer with H_2O to column. Column is ready for use after draining H_2O to top of resin column. (Exchange capacity for phosphate is approximately 1500 mg; therefore number of aliquots can be passed through column before regeneration is necessary. Rinse column with approximately 250 ml H_2O before each use until eluate is colourless).

4. PREPARATION OF SAMPLE

4.1 Liquid from canned whole tomatoes - Drain liquid from tomatoes, centrifuge and pass through fast paper. Weigh 100 g filtrate into Pt or porcelain dish. Evaporate to dryness, using forced-draft oven, infrared radiation, or other convenient means. Ash at temperature not more than 525°C until apparently C-free (grey to brown). Cool, add 20 ml H_2O, stir with stirring rod, and add 10 ml concentrated HCl cautiously under watch glass.

---

[3] Mallinckrodt No 5630 in dispenser bottle ready for use, or equivalent.

Rinse off watch glass into dish and evaporate to dryness on steam bath. Add 50 ml 10% HCl, heat on steam bath 15 min, and filter through paper for quantitative analysis into 200 ml volume flask. Wash paper and dish thoroughly with hot H_2O. Cool filtrate, dilute to mark, and mix.

4.2 Canned vegetables - Thoroughly comminute entire contents of can (representative portion if larger than 8 cm diameter can) in high speed blendor. Weigh 50 g sample (100 g sample if there is no declaration of added Ca) into Pt or porcelain dish. Evaporate to dryness using forced-draft oven, irradiation or other convenient means. Ash and treat as for liquid from canned whole tomatoes.

5. DETERMINATION

Transfer 50 ml or 100 ml aliquot prepared sample to 250 ml beaker and adjust to pH 3.5 with 10% KOH solution (added dropwise), using pH meter and magnetic stirrer. Pass sample through resin column (column is in chloride form), collecting effluent in 400 ml beaker and adjusting flow rate to 2-3 ml/min. Wash column thoroughly with 100 ml H_2O in two 50 ml portions. Pass first 50 ml through column at the same rate as samples. Pass second portion through at 6-7 ml/min. Finally, pass enough H_2O freely through column to make a total volume 250-300 ml. Mix thoroughly and adjust to pH 12.5-13.0 (using pH meter and magnetic stirrer) with KOH-KCN solution (approximately 10 ml). Add 0.100 g ascorbic acid and 200-300 mg hydroxynaphthol blue indicator. Titrate immediately with 0.01 M EDTA solution through pink to deep blue end point, using magnetic stirrer.

6. CALCULATION AND EXPRESSION OF RESULTS

For 50 ml aliquot: $$\% \text{ m/m Ca} = \frac{\text{Titration} \times 0.4008 \times 4 \times 100}{\text{sample (mg)}}$$

For 100 ml aliquot: $$\% \text{ m/m Ca} = \frac{\text{Titration} \times 0.4008 \times 2 \times 100}{\text{sample (mg)}}$$

Results are expressed as per cent m/m Ca of the final product or of the packing medium, as appropriate.

7. LITERATURE REFERENCES

Journal of the AOAC (1966), 49, 211

Journal of the AOAC (1968), 51, 494

CAC/RM 39-1970
TOUGH STRING TEST

1. DEFINITION

A tough string is a string that will support the weight of 250 g for five seconds or longer when tested in accordance with the procedure described below.

2. PRINCIPLE

Strings are removed from individual pods, fastened through a clamp assembly weighing 250 g, and hung so that the string supports the entire weight. If the string supports the weight for five seconds or more it is considered a tough string.

3. APPARATUS

3.1 Weighted clamp

Use battery clamp (with teeth filed off or turned back), spring operated clothes pin, or binder clip which presents a flat clamping surface. Attach weight so that entire assembly of weight and clamp weighs 250 g. See Figure 1. A bag containing lead pellets is convenient as a weight.

4. PROCEDURE

4.1 From the drained product select a representative sample of not less than 285 g. Record the weight of this test sample.

4.2 Break the individual bean units and set aside those that show evidence of tough strings. Remove the strings from the pods and retain the pod material for weighing.

4.3 Fasten the clamp assembly to one end of the string. Grasp the other end of the string with the fingers (a cloth may be used to aid in holding the string) and lift gently.

4.4 If the string supports the 250 g assembly for at least five seconds consider the bean unit as containing tough string. If the string breaks in less than five seconds, retest the broken parts that are 13 mm or longer to determine if such portions are tough.

4.5 Weigh the bean units which contain tough strings.

5. CALCULATION AND EXPRESSION OF RESULTS

$$\%\ \text{m/m pods containing tough strings} = \frac{\text{pods containing tough strings (g)}}{\text{test sample (g)}} \text{x}100$$

Figure 1 - Tough String Tester for Green or Wax Beans

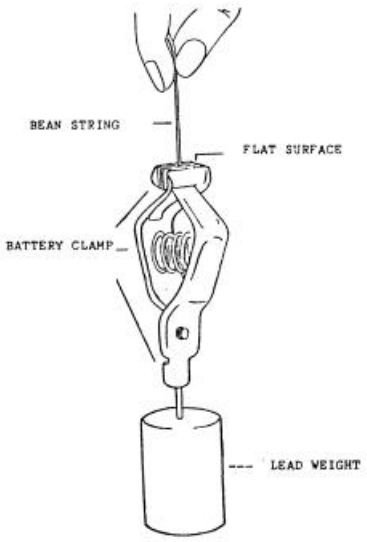

CAC/RM 45-1972
DETERMINATION OF PROPER FILL IN LIEU OF DRAINED WEIGHT

1. DEFINITION

The method for determination of proper fill is an alternative method for determining a fill of canned peas in lieu of the drained weight.

2. PROCEDURE

2.1 Pour the contents of one container into an empty container of the same kind and size and return the contents completely to its original container.

2.2 Level off the contents thus returned irrespective of the quantity of liquid 15 seconds after the contents are so returned.

3. EXPRESSION OF RESULTS

3.1 A container with lid attached by double seam shall be considered to be completely filled when it is filled to the level 4.8 mm vertical distance below the top of the double seam.

3.2 A glass container shall be considered to be completely filled when it is filled to the level 12.7 mm vertical distance below the top of the container.

CAC/RM 46-1972
DETERMINATION OF WATER CAPACITY OF CONTAINERS

1. SCOPE

This method applies to ~~metal containers and~~ glass containers.

2. DEFINITION

The water capacity of a container is the volume of distilled water at 20°C which the sealed container will hold when completely filled.

3. PROCEDURE

~~3.1 Metal containers~~

~~3.1.1 Select a container which is undamaged in all respects.~~

~~3.1.2 Wash, dry and weigh the empty container after cutting out the lid without removing or altering the height of the double seam.~~

~~3.1.3 Fill the container with distilled water at 20°C to 4.8 mm vertical distance below the top level of the container, and weigh the container thus filled.~~

~~3.2 Glass containers~~

3.2.1 Select a container which is undamaged in all respects.

3.2.2 Wash, dry and weigh the empty container.

3.2.3 Fill the container with distilled water at 20°C to the level of the top thereof, and weigh the container thus filled.

4. CALCULATION AND EXPRESSION OF RESULTS

~~4.1 Metal Containers~~

~~Subtract the weight found in 3.1.2 from the weight found in 3.1.3. The difference shall be considered to be the weight of water required to fill the containers.~~

~~Results are expressed as ml of water.~~

~~4.2 Glass Containers~~

Subtract the weight found in 3.2.2 from the weight found in 3.2.3. The difference shall be considered to be the weight of water required to fill the container.

Results are expressed as ml of water.

CAC/RM 47-1972
DETERMINATION OF ALCOHOL INSOLUBLE SOLIDS
(Based on AOAC Method)

1. DEFINITION

The alcohol insoluble solids content of peas is in relation to their texture and maturity.

2. MATERIALS

2.1 Specifications for circular sieves

2.1.1 If the quantity of the total contents of the container is less than 1.5 kg (3 pounds) use a sieve with a diameter of 20 cm (8 inches)

2.1.2 If the quantity of the total contents of the container is 1.5 kg (3 pounds) or more, use a sieve with a diameter of 30 cm (12 inches).

2.1.3 The meshes of such sieves are made by so weaving wire as to form square openings of 2.8 mm by 2.8 mm.[4]

3. PROCEDURE

3.1 Pour the sample on circular sieve. Spread peas evenly and let drain. Transfer peas to white pan and remove any foreign material. Add volume H_2O equal to double volume original sample.

3.2 Pour peas back on sieve, spreading evenly, tilt sieve as much as possible without shifting peas, and drain 2 minutes. With cloth wipe surplus moisture from lower surface of sieve. Grind drained peas in food chopper until cotyledons are reduced to smooth homogeneous paste, stir and weigh 20 g ground material into 600 ml beaker. Add 300 ml 80% (v/v) alcohol, stir, cover beaker, and bring to boil. Simmer slowly 30 minutes.

3.3 Fit into Büchner filter paper of appropriate size (previously prepared by drying in flat-bottom dish 2 hours at temperature of boiling H_2O, covering with tighfit cover, cooling in desiccator, and weighing at once). Apply suction and transfer contents of beaker to Büchner so as to avoid running over edge of paper. Suck dry and wash material on filter with 80% (v/v) alcohol until washings are clear and colourless.

3.4 Transfer paper and alcohol-insoluble solids to dish used in preparation of paper, dry uncovered 2 hours at temperature of boiling H_2O, place cover on dish, cool in desiccator and weigh at once. From this weight deduct weight of dish, cover and paper.

4. CALCULATION AND EXPRESSION OF RESULTS

Calculate % m/m of alcohol-insoluble solids.

5. LITERATURE REFERENCE

AOAC (1965) 30.015 - Alcohol Insoluble Solids in Canned Peas (6). Official.

[4] Ref. ISO Recommendation R 565. Such sieves could be replaced by US sieves with No 8 Standard screen (size of opening 2.38 mm).

CAC/RM 48-1972
METHOD FOR DISTINGUISHING TYPE OF PEAS

1. DEFINITION

This method is based on differentiation between starch granules of the wrinkled-seeded types and starch granules of the smooth-seeded types.

2. REAGENTS AND MATERIALS

2.l Compound microscope - 100 to 250 magnification.
- Phase contrast.

2.2 Microscope slide and cover glass.

2.3 Spatula.

2.4 Ethanol - 95% v/v.

2.5 Glycerine.

3. PROCEDURE

3.l Preparing mount

3.1.1 Remove a small portion of the endosperm and place on glass slide;

3.1.2 Using a spatula grind the material with 95% v/v ethanol;

3 l.3 Add a drop of glycerine, place cover glass on material and examine under microscope.

3.2 Identification

Starch granules of the wrinkled-seeded types (garden peas, sweet) show up as clear cut, well defined, generally spherical particles.

Starch granules of the smooth-seeded types (round, early, Continental) show up as an amorphous mass with no well defined geometric shape.

CAC/RM 49-1972
DETERMINATION OF MINERAL IMPURITIES (SAND)

1. APPARATUS

Blender or macerator (Atomix, Turmix, Waring or equivalent).

Beakers - 2,000 ml capacity.

Funnels.

Filter Paper, Whatman No. 1, or equivalent.

Porcelain or Platinum crucibles.

Air oven or bunsen burner.

Muffle furnace (600°C).

Desiccator with active desiccant.

Analytical balance.

2. REAGENTS

NaCl solution (15%)

HCl

$AgNO_3$

3. PREPARATION OF TEST SAMPLE

3.1 Containers of 500 g, or less - use the entire contents including strawberries and packing medium. Comminute in blender and use entire portion for the analytical sample.

3.2 Containers larger than 500 g - thoroughly comminute the contents of the entire container. Quickly remove a 500 g for the analytical sub sample (sub).

4. PROCEDURE

4.1 Transfer the analytical sub to a 2-L beaker taking care to include any sand that might settle out.

4.2 Nearly fill the beaker with water and mix contents by swirling, using a stirring rod if needed.

4.3 Let stand about 10 minutes and decant supernatant material and water into a second 2-L beaker.

4.4 Refill the first beaker with water, repeat the mixing and swirling operation and again let set 10 minutes.

4.5 Fill the second beaker with water, mix and swirl, and let stand 10 minutes.

4.6 At the end of the 10 minute period decant beaker No. 2 into beaker No. 3. Likewise decant beaker No. 1 in beaker No.2.

4.7 Repeat the sequence carefully decanting supernatant from beaker No. 3 into sink, until all fruit tissue is removed from the sample.

4.8 Finally collect the residue from all the beakers in beaker No. 3.

4.9 Remove any seeds or fruit tissue that settle out by treating the residue in beaker No. 3 with hot 15% NaCl solution.

4.10 Remove NaCl by washing with hot water. Removal can be verified by testing the washings with $AgNO_3$.

4.11 Finally transfer residue remaining in Step 4.10 to funnel fitted with ashless filter paper. Use small portion of water to assure transfer of all residue. Discard filtrate.

4.12 Transfer filter paper to a weighed crucible. Dry in air oven or oven bunsen burner. Ignite in muffle furnace for about 1 hour at 600°C.

4.13 Cool, add 5 ml HCl and heat to boiling. Again cool, add 10 ml H_2O and heat to boiling.

4.14 Filter, and wash free of acid.

4.15 Ignite the filter by an initial drying and incineration in muffle furnace at 600°C.

4.16 Cool in desiccator, and weight.

5. CALCULATION AND EXPRESSION OF RESULTS

5.1 The weight of acid insoluble residue is determined by subtracting the weight of the empty crucible from the weight of the crucible plus incinerated residue (expressed as mg).

5.2 Express the residue, i.e. mineral impurities as mg/kg of the total product.

(a) If the test sample is 500 g, multiply the value obtained in Step 5.1 by two (2).

(b) If the test sample is other than 500 g, use the following formula:

$$X = \frac{1000}{W} (R)$$

where:

X = mineral impurities

W = weight of test sample (grammes)

R = residue remaining after incineration (milligrammes)

6. LITERATURE REFERENCE

Journal of the AOAC, Vol. 54, No. 3, 1971 (pages 581-583)

DETERMINATION OF VOLUME FILL (BY DISPLACEMENT)
METHODS I, II AND III
(PICKLED CUCUMBERS)

METHOD I

(1) This method may be used for all sub-types of pickles. Use a four to eight litre size can with an overflow spout constructed from 0.5 cm to 1 cm inside diameter metal tubing (see figure 1). The tubing is soldered to an opening in the side of the can 2 to 3 cm from the bottom and is bent upward parallel to sides. The tube is bent over and slightly downward from the can at the upper end to form a spout about 4 cm below the top of the can. The lower tip end of the spout is lower than the inside lower curve of the spout (point A). The upper tip end of the spout is higher than the inside lower curve of the spout (point A). The upper tip end of the spout is slightly shorter than the lower tip end of the spout. A brace near the top of the can holds the tubing firmly in place. A woven wire basket made from screen wire with about eight meshes to the inch with a handle is used for lowering the pickle ingredient into the overflow can.

(2) Place overflow can on a level table so that overflow will discharge into a sink. Fill the overflow can with water at room temperature (approximately 20°C or 68°F). Place the empty basket into the filled overflow can.

(3) When overflow ceases, place a beaker or graduated cylinder under the spout.[5]

(4) Remove basket and place drained pickle ingredient (at room temperature) in basket and lower slowly into the overflow can. When overflow ceases, measure the volume of the fluid overflow. The percent volume of pickle ingredient (volume occupied) is calculated as follows:

$$\frac{\text{Overflow Volume} \times 100}{\text{Total capacity (volume) of container (CAC/RM 46-1972)}} = \text{percent volume of pickle ingrediente}$$

Figure 1

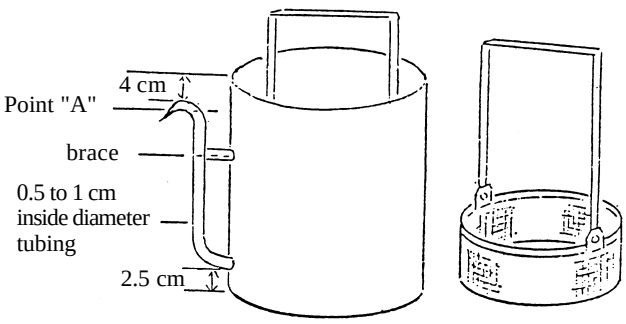

Overflow can

[5] NOTE: Prior to determining the percent volume of pickle ingredient for mustard pickles, the drained pickle ingredient is prepared as follows: Empty the contents of the container upon an ISO Recommendation R 565 or a U.S. Standard No. 8 sieve of proper diameter so as to distribute the product evenly. Wash off all adhering sauce under a spray of water at a temperature of approximately 20°C (680F). Incline the sieve to facilitate drainage and allow to drain for two minutes. Proceed with (4).

METHOD 2

(1) Use water to partially fill a graduated cylinder (or other technical measuring device) large enough so that the pickle ingredient from one container may be completely submerged.

(2) Prior to adding the pickle ingredient, record the volume of water in the partially filled cylinder.[6]

(3) Add all the drained pickle ingredient from one container so that it is entirely submerged.

(4) Measure the volume of liquid and pickle ingredient after submersion of pickle ingredient.

(5) Subtract the value in (2) from the value in (4) to obtain the pickle ingredient displacement.

(6) To determine Volume Fill, calculate:

$$\frac{\text{Pickle Ingredient Displacement x 100}}{\text{Total Capacity (volume) of Container (CAC/RM 46-1972)}} = \text{percent volume of pickle ingredient}$$

METHOD 3

(1) Remove and collect the packing medium from the container for other quality determinations - 2.2.3.[7]

(2) With the pickle ingredient in the container fill it to capacity (CAC/RM 46-1972) with water.

(3) Drain, collect and measure the water.

(4) To determine Volume Fill, calculate:

$$\text{percent volume of pickle ingredient} = \frac{V_1 - V_2}{V_1}$$

Where,

V1=Total capacity (volume) of container (CAC/RM 46-1972); and

V2=Volume of drained water from (3) above

[6] NOTE: Prior to determining the percent volume of pickle ingredient for mustard pickles, the drained pickle ingredient is prepared as follows: Empty the contents of the container upon an ISO Recommendation R 565 or a U.S. Standard No. 8 sieve of proper diameter so as to distribute the product evenly. Wash off all adhering sauce under a spray of water at a temperature of approximately 20°C (68°F). Incline the sieve to facilitate drainage and allow to drain for two minutes. Proceed with (3) above.

[7] NOTE: Prior to determining the percent volume of pickle ingredient for mustard pickles, the drained pickle ingredient is prepared as follows: Empty the contents of the container upon an ISO Recommendation R 565 or a U.S. Standard No. 8 sieve of proper diameter so as to distribute the product evenly. Wash off all adhering sauce under a spray of water at a temperature of approximately 20 C (68 F). Incline the sieve to facilitate drainage and allow to drain for two minutes. Proceed with (2) above.