AGL/MISC/32/2001

SMALL DAMS AND WEIRS IN EARTH AND GABION MATERIALS

Food and Agriculture Organization of the United Nations

AGL/MISC/32/2001

SMALL DAMS AND WEIRS IN EARTH AND GABION MATERIALS

FOOD AND AGRICULTURE ORGANIZATION OF THE UNITED NATIONS

Land and Water Development Division

Rome, 2001

Foreword

Beginning in the 16th century, engineers in Europe used wicker baskets - Italian *gabbioni* - filled with soil to fortify military emplacements and reinforce river banks. Today, the same simple technology - now known as "gabions" - is used as the building blocks of low-cost, long-lasting hydraulic structures in developing and developed countries.

These days galvanized steel wire-mesh has replaced wicker, and stones are used instead of soil, but the underlying strength of gabions is unchanged. The intrinsic flexibility of a gabion structure enables it to bend rather than break, thereby preventing loss of structural efficiency. Since gabions are bound together, they will withstand a degree of tension that would severely test a dry stone construction and be dangerous with plain concrete and masonry.

Wicker Basket - Gabbioni

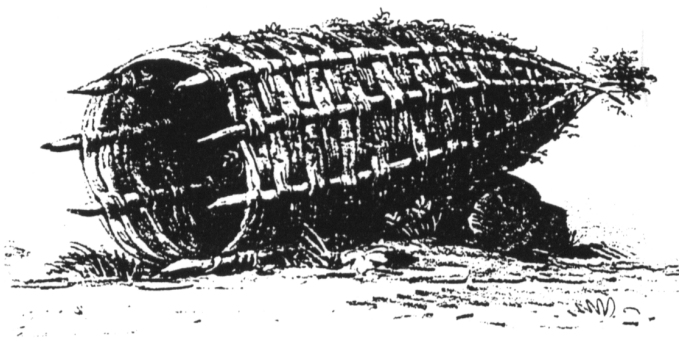

Gabion baskets can also be manufactured - literally, by hand - at village-level. This is a double advantage: it lowers the purchase cost of the baskets and creates a small rural industry, using local labour. This is in line with trends towards increasing use of labour intensive techniques in modern development projects.

Modern gabion

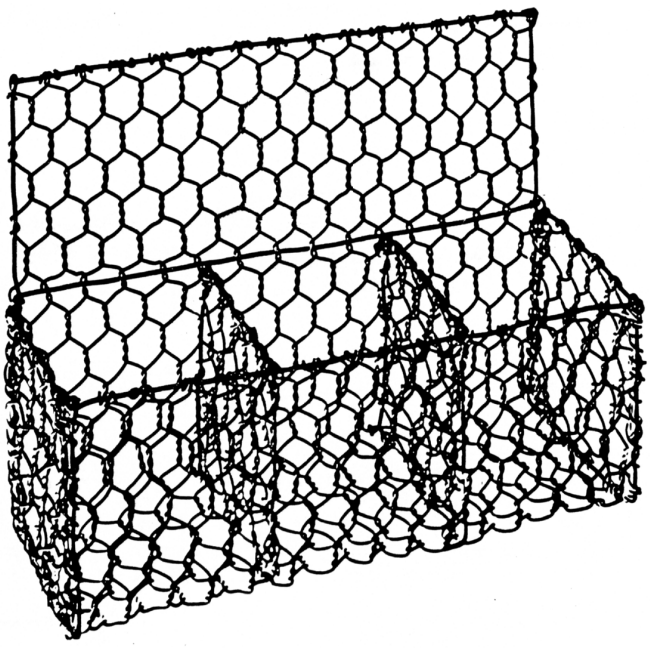

Gabions are now recognised by most engineers throughout the world as being a standard construction material. FAO has long experience with gabion construction in various countries of the developing world, including Botswana, China, Egypt, Eritrea, Ethiopia, Guinea Bissau, Haiti, Niger, Malawi,

Nigeria, Viet Nam, etc., where water development and irrigation projects have all made use of either imported or locally-made gabion baskets. The structures most frequently consist of earth retaining and anti-erosion structures such as retaining walls for earth excavations and embankments, sea, river and canal banks lining , small dams, spillways, weirs, groynes, etc.

The design and construction of gabion structures have not always been up to standard and, as a consequence, have caused partial or total failure of the works due to lack of (or excessive subsidence of) foundations and, most often, due to the progressive infiltration and leakage of water along the interface between the gabions and adjacent earth materials and foundations. In fact, as with any civil engineering structure, unless the same care is given and attention paid to the proper design and construction of a gabion structure the result can just as well end up in failure. However, it is worthwhile noting that the inherent flexibility and ability to survive distortion without fracture is such that a badly designed gabion structure is more likely to survive than would a similar monolithic structure.

Damages

The present publication is a set of practical guidelines and norms for field project engineers for the design and building of small hydraulic structures using earth and gabions. This publication would be useful in designing small earth dams with a gabion spillway, intake weirs for gravity irrigation schemes, groynes, river bed training works and for protection against hydraulic erosion.

Gabion construction

Acknowledgements

This publication is the result of a collective effort: field engineers having considerable experience have contributed, often under difficult conditions, to the design and the construction of hydraulic structures made in earth and gabion materials in FAO-executed projects in a number of countries with a large array of cultural and climatic differences. This vast experience includes mainly successful results. However, a few drawbacks have been experienced as being the result of harsh meteorological and hydrological conditions which may have been underestimated. Gabions have moved, have had unacceptable distortion and warping, some layers of gabions have been outstripped and rolled over several meters. However, these negative experiences have also had their positive side as they have contributed to an increasing experience in building safe structures under often a tight budget. Design and construction of new projects should then be carried out with a much greater factor of safety.

We are grateful to the authors of this bulletin, John Charman, the late Lubtcho Kostov, Luciano Minetti, Joop Stoutesdijk and Dario Tricoli who have prepared the main report and the Annexes containing case studies. The coordination was provided by Olivier Berney.

Special thanks are due to Simone Morini for his valuable assistance in the preparation and formatting of the text. John Charman further contributed in editing the final document.

Contents

List of figures

List of tables

List of plates

Introduction

This manual is aimed principally at the developing world and addressed to those engineers who have to design and build small dams and weirs with only limited specific experience. All the technical methods proposed are described within the context that they will be used in areas where access, available skills, materials and resources may be limited. In particular the approach has been conceived with the following objectives:

- Safety
- Simplicity
- Technical sustainability
- Acceptable environmental impact
- Low cost
- Maximum utilisation of local skills and materials

The manual is based on experience accumulated over many years in the developing regions of the world, including Botswana, China, Egypt, Guinea Bissau, Haiti, Niger, Nigeria, Eritrea, Ethiopia, Somalia, Vietnam.

The investigation approach

The investigation of a small dam comprises two distinct components. The first is the siting of the structure and the computation of the height of the structure in order to maximise the storage volume of the reservoir. Both of these factors require an investigation and assessment of the hydrology of the catchment area upstream of the dam location. Only when hydrological data is available can the dam and spillway be designed to adequately handle the anticipated flows.

The second component is the investigation of the dam site itself to establish that the geotechnical characteristics, such as bearing capacity, settlement, permeability and slope stability are suitable for the structure.

The design approach

The design methods and construction solutions proposed in this manual are chosen considering the following constraints:

- Limited availability of funds;
- Limited local experience in design and construction of water retaining structures
- Limited design support, such as calculation tools
- Limited availability of construction equipment for earth moving and good quality concrete construction;
- Lack of equipment for foundation treatment (compaction, stabilisation and ground improvement);
- Lack of rigorous construction control systems.

Any of the techniques summarised in this manual are capable of a range of approaches. A spillway, for example, could be designed to a low factor of safety based on a detailed site investigation and laboratory measured soil properties, utilising reinforced concrete, and based on the premise that construction will be closely supervised by experienced personnel and built by an experienced contractor. Alternatively, an equally responsible approach, applicable in a remote environment, could involve a design based on a site inspection by an experienced technical specialist, using judgement to evaluate conservative soil properties, employing locally available materials and accepting modifications to the design by an experienced construction professional who may be using the construction to train a local contractor or village labour force. The local labour force is thus trained to facilitate maintenance into the future and sustain the life of the project. This manual concentrates on providing guidance for the latter, more empirical, approach.

The design calculations proposed in this manual are achievable using simple technical calculators. For the spillway, in addition to the theory and normal calculation sequence, commercial software has also been assessed in order to allow proven methods to be quickly adopted in the design of this essential part of the structure.

The manual gives strong consideration to environmental matters, particularly the impact of the construction activity and the introduction of regulations for an appropriate decommissioning of the area after the completion of the works.

By definition, the approach adopted in this manual will impact less on the environment than a major project approach. The methods use local materials and will tend to blend more easily into the landscape. The labour force is provided in most instances by the beneficiaries to the project and so social impact is minimised. Local regular monitoring of the structures is possible and the maintenance required to correct minor failures and effect repairs is vested in the beneficiaries.

The construction approach

This manual assumes that the structures will be constructed using mainly manual labour methods, and the following components are considered:

- Foundation preparation, including stripping of topsoil and levelling;
- Construction of embankment components, including selection of material, placement and compaction of the embankment dam, filters, protective facing layers, impervious cut-offs and blankets;
- Construction of weir and spillway components utilising gabions, including fabrication of the gabion boxes using special looms, selection of stone/rock material, filling the gabion boxes and construction methods for the whole structure;
- Simple but reliable methods of concrete mix design and production controls appropriate to a rural environment.

Chapter 1

General considerations

Types of small dams

The selection of a particular type of small earth dam or weir depends on several factors including its future use, the geomorphological and hydrological characteristics of the catchment area, the geotechnical characteristics of the site, the local availability of construction materials and the skills and experience of the local workforce.

Small dams and weirs can be divided into the following main structural types, and their design depends on the characteristics of the site and the catchment

- earth fill dams,
- gabion weirs,
- earth fill dikes.

Plate 1.1
An example of an earth-fill dam

Plate 1.2
An example of a gabion weir

PLATE 1.3
An example of an earth-fill dike

Each type of structure is described below together with suitable site and watershed characteristics:

Earth fill dams

Small earth fill dams are usually built in small catchments in order to store water for irrigation, human needs and livestock watering. Storage structures are generally used when there are substantial seasonal runoff variations. The required storage volume is established according to local water requirements and runoff fluctuations. For example, in arid and semi-arid regions, earth fill dams are used to store water during the rainy season, making it available for consumption in the dry season. The embankment is normally constructed using the rolled-fill technique. The embankment height generally does not exceed 10-12m and its length is usually not more than a few hundred metres.

They are generally equipped with both a spillway and an outlet structure. To prevent overflow over the structure, the spillway should be designed to handle the maximum discharge during runoff events of a selected probability. Gabions should be used to protect the spillway from erosion. A pipe located next to the embankment shoulder functions as an outlet. It is used to let water out of the reservoir, or in detention dams to gradually release runoff water. The pipe diameter is determined according to the required water flow. A gate system controls the flow discharge.

Factors which influence the suitability of small earth dams are:

- availability of local construction materials (earth, stone, water);
- the possibility of utilising a large impounding reservoir in relation to runoff volume, with an impervious substratum;
- low stream sediment transportation rates to delay reservoir sedimentation;
- adequate geotechnical characteristics to support embankment loads and avoid excessive,water seepage;
- adequate basin runoff characteristics for project requirements (e.g. volume, seasonal variability).

Gabion weirs

Gabion weirs are structures built across the streambed for flood regulation and river training purposes in order to stabilize the bed profile. They are used to control the effect of water runoff

in a watercourse bed, mitigating erosion phenomena. They are built on river courses to decrease the bed gradient and thus to reduce flow velocity. Weir height is generally limited to between 2 m and 4 m to prevent erosion damage immediately downstream which could cause weir undermining.

Gabion weirs used as diversion structures are generally equipped with a gated or non-gated outlet system, in order to divert runoff flow. Water spreading dams are used to raise the water level above the flood plain when spate floods occur, thus allowing flood control of adjacent cultivated areas and irrigation schemes.

Factors which influence the suitability of gabion weirs are:

- availability of local construction materials (stone, earth, water);
- relatively straight longitudinal stream section, in order to avoid bank erosion downstream of the structure;
- compatibility between stream bed level and outlet level;
- potential for establishing a series of gabion weirs (check dams) along the stream;
- adequate geotechnical characteristics of the site to support structure loads;
- appropriate basin runoff characteristics (e.g. floods, flow volume, seasonal variability).

Earth fill dikes

Earth fill dikes are built along stream banks in order to protect the flood plain from seasonal flooding. Embankment height generally does not exceed 3 m to 4 m but the length can extend to several kilometers, depending on site topography. Generally, a gated outlet system is built to allow the passage of water from the stream to the flood plain or vice versa, if required.

Factors which influence the suitability of earth fill dykes are:

- availability of local construction materials (earth, water);
- suitable site topography;
- adequate geotechnical characteristics.

MAIN COMPONENTS OF A SMALL DAM PROJECT

The structures considered are constructed with natural materials with the scope to retain water. The structure is located across a valley where there is a seasonal or permanent water flow. The water is stored upstream of the embankment dam and the stored water volume in the reservoir is determined by the upstream topography of the catchment and the height of the embankment. The dam is designed to retain all, or only part, of the flow according to the project requirements.

An earth dam is composed of three main components:

- Earth embankment
- Spillway and stilling basin
- Ancillary works, such as the inlet, outlet structure, valves, gates, etc.

Earth embankment

The embankment is constructed mainly using natural soil/earth materials and a typical cross-section is given in Figure 1.1.

FIGURE 1.1
Typical cross-section of an earth embankment dam

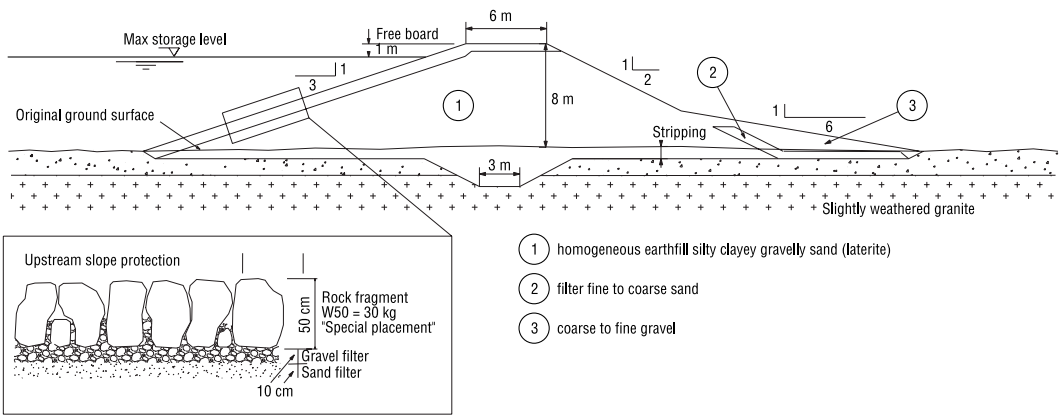

The embankment is constructed to its required height by compacting a series of successive soil layers and must be relatively impermeable so as to act as a barrier to water flow. Several terms need to be defined:

The *crest* is the flat top to the embankment and the vertical distance between the crest and the water level in the reservoir is the *freeboard*. The crest separates the *upstream slope*, on the reservoir side, and the *downstream slope* facing down the valley. The upstream slope needs *slope protection* against the waves in the reservoir which is usually made of a layer of stone called *rip-rap* and a sand and gravel *filter layer*. The downstream slope also needs slope protection against rainsplash and runoff water, usually in the form of turfing.

The embankment comprises *earth fill*. Depending on the availability of suitable materials to build the embankment, it can be made with one single relatively impermeable earth material *(homogeneous fill)*, or this material can be used only for the *core* of the embankment and the flanks on either side are zones of permeable granular or *rock-fill* material *(zoned fill)*. Where no impervious material is available, then a *sealing membrane* has to be used on the upstream slope which may be bitumen or a plastic geomembrane (see Figure 1.2) Below the dam a *cut-off trench* is usually dug to a relatively impermeable stratum and filled with the earth-fill or core material. A toe drain system is usually placed under the downstream slope to intercept water seepage through or under the earth or rock embankment.

FIGURE 1.2
Zoned earthfill dam

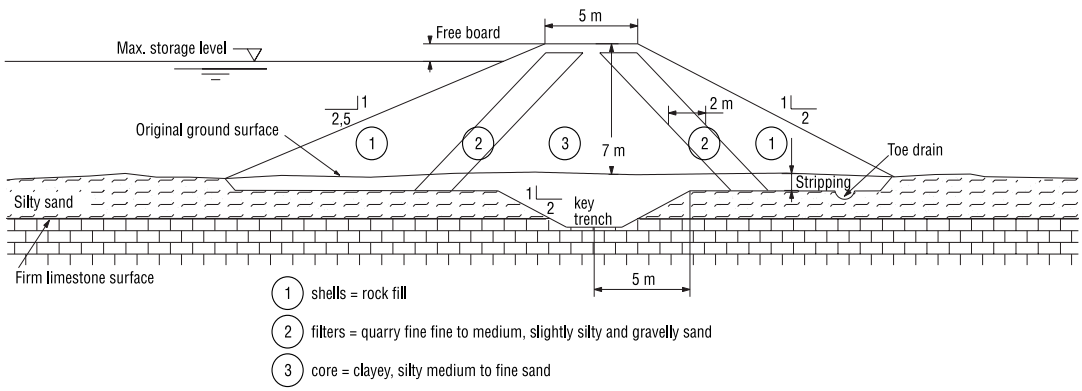

Spillway

The spillway allows excess water to flow downstream so that the dam does not overtop during flood events. The spillway is located either in the center of the embankment or to one side of the valley (see Figure 1.3).

The spillway has to resist erosion caused by flowing water. Gabions can be erected without mechanical equipment, use local materials and are flexible structures. A central spillway using gabions is illustrated in Plate 1.4.

FIGURE 1.3
Examples of spillway locations

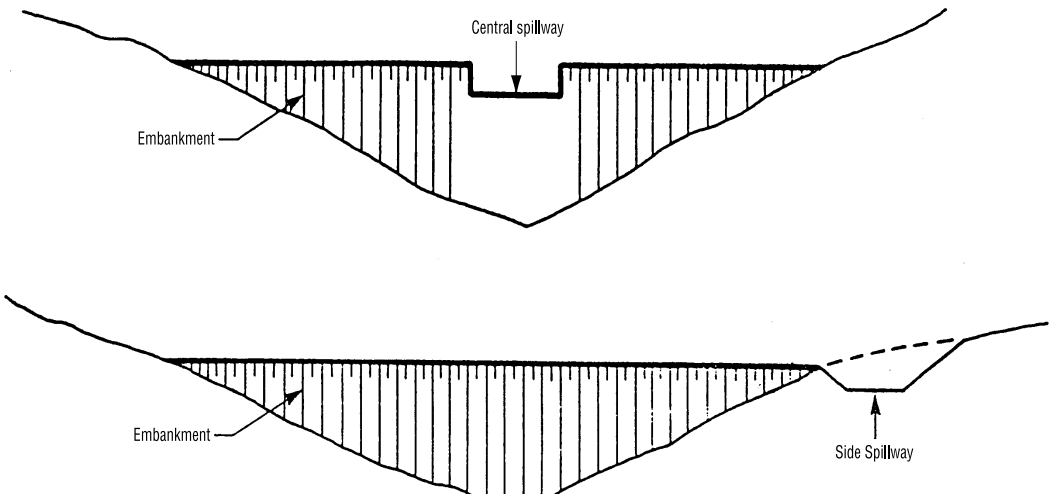

PLATE 1.4
A central spillway using gabions

The stilling basin is an important element of the spillway. The water discharging from the spillway has a high velocity and, therefore, high erosion potential. The stilling basin provides the area for the flow at high velocity to be reduced before the water returns back to the natural river channel downstream of the dam.

Outlet structure

The outlet structure usually includes an intake structure at a low level in the reservoir close to the upstream slope of the dam, linked to a pipe laid through the embankment to a valve chamber close to the toe of the downstream slope.

INVESTIGATION SURVEYS AND DESIGN

Once the type of hydraulic structure is selected, further investigations should be carried out in order to cover all the aspects of project planning, design and construction. The investigations can be divided into different phases, from a preliminary survey to assess the feasibility of the project, to specific surveys providing data for final design.

Collecting existing data

The first step involves the collection of available data that would be useful at different phases of the project: thematic mapping (topography, geology, hydrogeology, land use and vegetation cover), aerial photos, satellite images (Spot, Landsat TM), hydrological data (runoff and sediment transportation), hydrogeological data (ground water), meteorological data (rainfall and evaporation) and geotechnical and geological data (ground conditions), general data on population, agriculture and livestock.

Preliminary site survey

The preliminary site survey would confirm that the site under consideration is suitable for building the hydraulic structure. A preliminary site inspection is needed to verify if topography, ground conditions, and other relevant requirements are met. This includes a preliminary topographic survey which consists of cross- and longitudinal sections of the water course would enable the structure to be dimensioned . A preliminary soil survey is necessary to verify if local geotechnical characteristics meet the structure requirements, and if suitable construction materials are available within reasonable distance.

Feasibility studies

Comprehensive topographic and geotechnical surveys of the areas around the structures and reservoir should be carried out, in order to estimate the reservoir capacity and to evaluate the

ground conditions. Test pits in the quarry area will provide the characteristics of local construction materials and the quantities available. It will be necessary to make soil test pits in the embankment footprint in order to determine the depth, thickness and geotechnical characteristics of the subsoil layers.

A preliminary project design will determine the quantities of materials required and the means necessary to build the structure.

It is then necessary to prepare a general situation map of the whole project in order to estimate the total cost of the structure, which should be compared to the benefits that would be derived.

The watershed boundary has to be delineated and classified according to its topography, geology and drainage features.

Detailed design

All the structures of the project must be designed and verified, such as the water storage volume for an earthfill dam, or the weir height for a diversion dam. The dimensions of the spillway should be calculated. This is particularly important because a common cause of earth dam failure is overtopping above the dam crest due to under-estimation of the design flood.

A map and sections must be prepared for each component of the structure. Cross-sections of the earth embankment should be designed to mitigate hydraulic seepage through and under the dam. For this latter purpose, specifications have to be defined such as stone size for gabion filling and moisture content for earth fill materials.

A detailed work plan for each phase of the construction has to be prepared to optimize the efficient utilisation of available resources.

Various types of equipment and instruments will be required throughout the investigations, such as standard topographic survey and geotechnical equipment. If available, a computer would provide a valuable tool for design and computations. Relevant specialized software would include GIS - Geographical Information System - for map preparation, CAD - Computer Aided Design - to graphically summarise the data collected during the reservoir survey, and dedicated hydrological and hydraulic software for the estimation of various features of the hydraulic structures.

During the design phases, it is important to take into consideration, and try to minimize, future maintenance tasks. In fact, experience has shown that minor damage is often left unrepaired and is the forerunner of more severe structure failure.

Technology of gabions

Modern gabions are usually rectangular baskets, divided by diaphragms into cells and formed of woven steel wire hexagonal mesh, double twisted and heavily galvanised. Wire diameter standard sizes range from 2.0 to 3.0 mm. All the edges of the panels forming the basket, including the diaphragms, are reinforced with galvanised wire of a greater diameter than that used in the woven mesh. Hand-made gabions are reinforced with the same wire diameter as the one used

TABLE 1.1
Standard manufactured gabion baskets and mattresses

Dimensions metres	No. of diaphragms	Capacity m^3
2x1x1	1	2
3x1x1	2	3
4x1x1	3	4
2x1x0.5	1	1
3x1x0.5	2	1.5
4x1x0.5	3	2
2x1x0.3	1	0.6
3x1x0.3	2	0.9
4x1x0.3	3	1.2

Gabions - specifications

Galvanised		P.V.C. Coated	
nominal mesh size (mm)	mesh wire diameter (mm)	nominal mesh size (mm)	mesh wire diameter (mm)
80x100	2.7	60x80	2.2
80xl00	3	80xl00	2.2
100xl20	3	80xl00	2.7
100xl20	2.7	100xl20	2.7

Mattresses - standard units

Nominal mesh size (mm)	Mesh wire diameter (mm)	Length (m)	Width (m)	Diaphragms (No.)	Thicknes s (mm)
6x 80	2.0	6.0	2.0	9	170
	(galvanised)				230
	2.2				300
	(p.V.C.Coated)				

Notes: It is possible to obtain special sizes of gabions and mattresses provided that a sufficient quantity are ordered.

The wire diameter given in the P.V.C. Coated tables is the actual diameter of the wire not the overall diameter of wire plus P.V.C.

The necessary binding wire 2.2 mm in diameter galvanised or P.V.C. Coated is supplied with the gabions or mattresses.

to weave the baskets, industrially produced gabions, however, are reinforced with larger standardized wire diameter.

The baskets are usually supplied folded flat in compressed bundles for maximum ease and economy in shipment. They are unfolded and assembled on site using galvanised wire in a continuous lacing along the edges. Sufficient quantities of the appropriate wire must be supplied

with the baskets. It consists usually of rolls of galvanized wire at a weight ratio of about 5% of gabion weight.

In addition to the rectangular baskets, mattresses are also manufactured, the standard dimension being 2 m. wide by 6 m. long with thickness available between 150mm and 300mm. Mattresses have closely spaced diaphragms and in all other respects are manufactured, supplied and assembled in the same way as the baskets.

Complementary to the rectangular baskets and mattresses, trapezoidal baskets also may be obtained, these are used to construct, for example, a weir with a batter on the front face or angled junctions in the horizontal or vertical plane. Generally, the number of such units required in a given job is small compared with the total number of gabions involved and it is more usual to modify standard rectangular gabions on site by cutting and folding of the required panels.

Standard gabion baskets and mattresses are given in Table 1.1.

It should be noted that the mesh used in the gabion baskets and mattresses is double twisted to prevent unraveling. Under no circumstances should chain link fencing or other loosely woven mesh be used for the fabrication of gabion baskets or mattresses. If such wire mesh is cut it will start immediately to unravel causing the release of the stones filling the gabion and subsidence and eventually the collapse of the basket and possibly the whole structure. Double or treble twisted hexagonal mesh which has been cut can be repaired easily without damage to the gabion as a whole (Figure 1.4).

FIGURE 1.4
Woven wire mesh

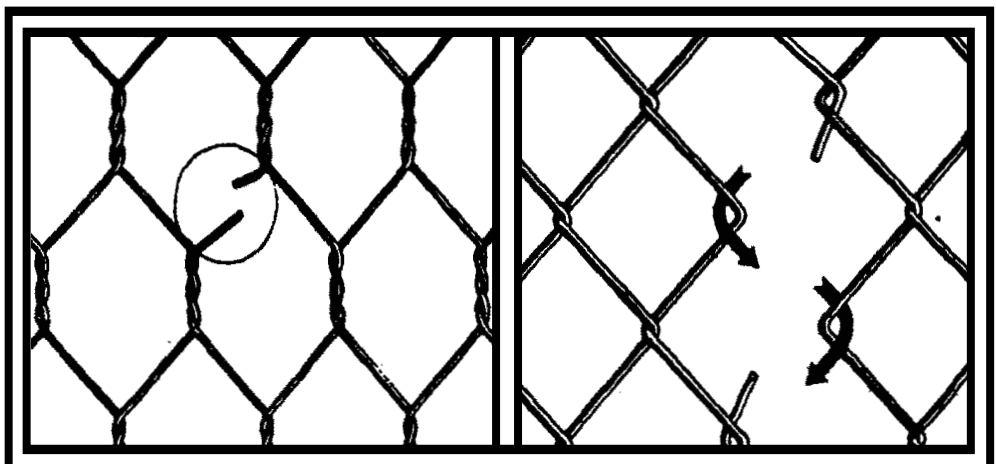

In marine and industrial surroundings and with soils and water having low pH values, PVC-coated gabions should be used. Otherwise galvanised wire baskets can be expected to have a life of up to 40 years and, as has already been noted, examples exist over 80 years old.

Chapter 2

Hydrological studies

A detailed analysis of runoff calculation procedures is beyond the scope of this publication and a number of specialized books are entirely dedicated to this subject (Ven Te Chow, 1959; Linslay, Kohler, Paulhus, 1958; Reméniéras, 1972). Yet it is useful to provide a general description of the hydrologic methods used to estimate the catchment runoff features. This chapter also illustrates the main procedures used to characterize watershed features and meteorological data, required in the application of hydrological methods.

When designing a small dam it is necessary to determine the catchment runoff features, e.g. runoff coefficient, annual flow volume, maximum runoff, discharge,). Unless the catchment has already been monitored, these runoff characteristics are unknown. We have then to rely on data collected from similar catchments elsewhere in order to extrapolate the runoff characteristics. Runoff characteristics depend on several catchment features such as shape, relief and drainage pattern and on local rainfall characteristics. The nature and the use of the soil in the catchment area also affects the catchment response to rainstorm events.

In hydrological terms, there are several ways to classify watersheds on the basis of the above mentioned characteristics. These hydrological methods of classification are based on the analysis done on a wide range of monitored watersheds. On the basis of data collected during runoff events in these monitored watersheds, relationships between runoff features and various watershed characteristics - basin shape and surface, soil features - have been established.

This chapter provides a general description of the catchment features required in the application of these classification methods. Some of the main hydrological methods used for estimating runoff features - rational method (Reméniéras, 1972, Mc Cuen, 1989; Schwab, Frevert,et al, 1992, Maione, 1995 and Roche, 1963) - will also be briefly described. The following sections consider in turn:

- Definition and delineation of a watershed;
- Morphological features required to classify watersheds according to one of the standard methods;
- Soil characteristics;
- Rainfall characteristics;
- Hydrological methods to assess runoff characteristics;
- Other factors such as erosion, sediment transportation and evaporation.

It is worth mentioning that computers and GIS systems software considerably facilitate investigations on catchment geomorphology, particularly for the interpretation of satellite imagery.

Catchment

By definition, a hydraulic structure is positioned at a catchment outlet as the latter is defined as the land area that conveys runoff to the outlet during a rainstorm (Mc Cuen. 1989). A line called the water divide or watershed boundary delineates this area. The water divide also delineates the separation between two different watersheds: rain falling on one side of this line sheds to the outlet of one watershed and, conversely, rain falling on the other side sheds to the outlet of the other watershed, as shown in Figure 2.1.

Figure 2.1
Watershed representation

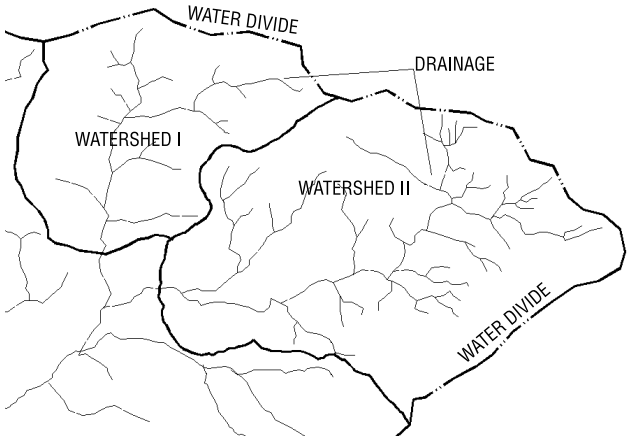

The preliminary phase of watershed delineation consists of drawing the water divide. To do this, a topographic map of the area is required. Aerial photos viewed with a stereoscopic device can also be used. The different steps involved in drawing the water divide on a topographic map are set out below (see Figure 2.2).

- **Step A:** mark the site of the hydraulic structure (this point is the watershed outlet);
- **Step B:** draw all the drainage channels which flow to the outlet;
- **Step C:** mark the crest of the mountains and hills which define the catchment;

Figure 2.2
Steps in defining the watershed

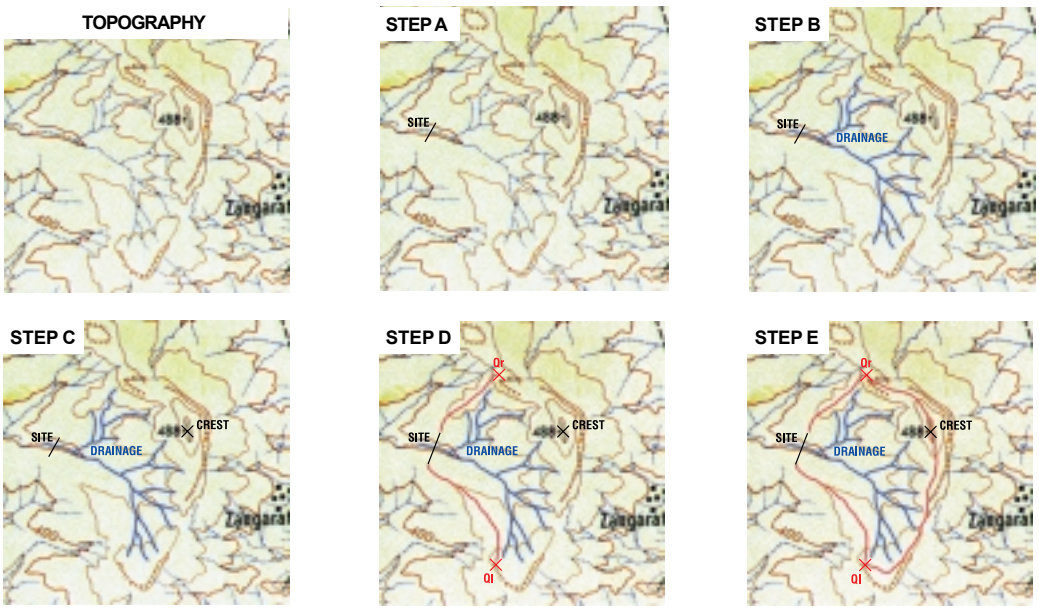

- **Step D:** draw two lines, perpendicular to the elevation contour lines (along the maximum slope direction), connecting the outlet point with the two upper points (Ur, Ul);
- **Step E:** from one of these points, for example Ur, draw the water divide which should join all the marked crest-points as far as the second upper point Ul. This line will mark the minimal slope direction. All runoff originating from inside this line should flow towards the drainage channels.

Basin morphology

The catchment morphology should be analyzed in order to derive important parameters, such as catchment shape and relief, and the drainage pattern.

Shape

The catchment reaction to a rainstorm depends, inter alia, on its shape. For example, the two different catchments shown in Figure 2.3 would not have the same reaction time, other things being equal (such as surface, vegetative cover, soil characteristics and topography). The runoff of the longest watershed (II) is expected to be of longer duration than the more compact one (I).

Several parameters have been introduced to represent the catchment shape. The most commonly used is the circularity ratio (Fc), also called Gravelius Index, which is given by (Roche 1963, USBR, 1987)

$$Fc = 0.28 \cdot P \cdot S^{0.5}$$

where:
P and **S** are, respectively, the perimeter and the area of the watershed expressed in km and km^2 respectively.

Figure 2.3
Watershed shape

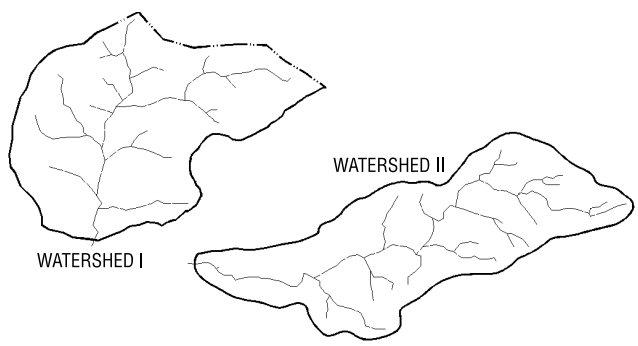

Relief

The runoff speed, both overland and in drainage channels, depends to a large extent upon channel and land slope. A number of parameters have been developed to characterize variations in watershed relief. The channel slope represents the slope of the main drainage channel of the watershed, and is expressed by the following relationship:

$$i = DE / L$$

where:
DE is the difference in elevation between the upper beginning of the channel and the outlet;
L is the length of the channel between these two points.

The hypsometric curve represents the relationship between the elevation and the catchment area. The hypsometric curve is generally plotted as shown in Figure 2.4. This curve is also

represented in dimensionless form by plotting cumulative percentages of the area rather than the real values (FAO, 1996).

FIGURE 2.4
Hypsometric curve

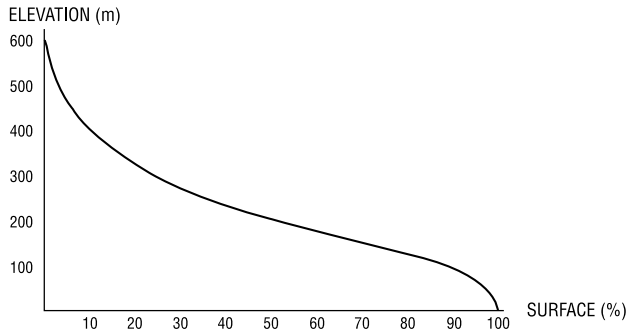

Another important parameter to classify a watershed is the Slope Global Index (Ig) which is function of shape, surface and relief of the watershed (Roche, 1963, FAO, 1996).

Drainage pattern

The reaction time of a basin to a rainstorm event depends primarily on the length of the main drainage channel. Also, the rain falling in the basin will take some time to travel as surface runoff to the drainage channel. The flow velocity of surface runoff is usually inferior to the flow occurring in a drainage channel. In a catchment with a dense drainage pattern, the rainwater will normally have to travel only a short distance overland before reaching a drainage channel. Consequently, the catchment reaction time will be shorter than in the case of a basin characterized by a scattered drainage pattern. Several parameters have been introduced to represent the drainage pattern (Chow, Maidment, Mays, 1988; Moisello, 1985). The most important among them is the drainage density, defined as the ratio of the total length of the drainage channels to the watershed surface. The drainage pattern is an important indicator of soil features. A dense drainage pattern is generally indicative of an impervious soil, whereas a pervious soil is characterized by a scattered drainage pattern as shown in Figure 2.5.

In arid and semi-arid regions, in large watersheds, the phenomenon of endoreism is commonly found (Roche 1963). This refers to portions of drainage area that do not reach the watershed outlet, as shown in Figure 2.5 (c). In these instances the runoff will collect in a depression and form a pond or a marshy area. Alternatively, it may infiltrate into the subsoil.

FIGURE 2.5
Examples of watershed drainage patterns

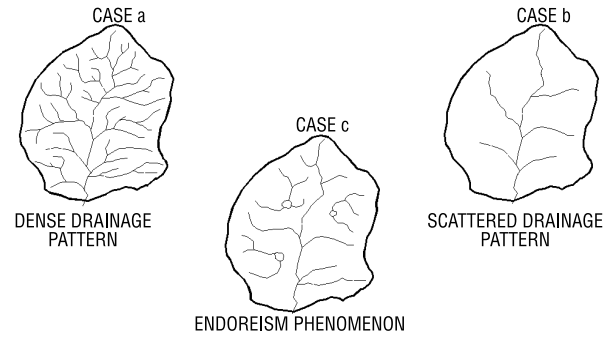

SOILS

The characteristics of soils in a watershed are important for the determination of the runoff because their texture, structure and moisture influence the rainfall infiltration rates. Texture refers to the relative fractions of mineral particles of different sizes present in a soil. In particular, the percentage of clay in the soil significantly influences the soil infiltration rate. The tendency of soil particles to

aggregate into lumps and clods determines the soil structure. The soil structure varies according to its grading, organic content, and mineral composition.

The vegetation cover also affects the soil retention and influences the runoff features. The vegetation generally absorbs the first portion of a rainfall event and, if the basin presents a thick vegetative cover, the amount of water retained can represent an important percentage of the total rainfall. The presence of vegetation also favors the infiltration of rainfall through the roots. The stems of grass and shrubs hinder the overland flow and consequently delay the runoff.

Rodier (Rodier, Ribstein. 1988) proposed a qualitative classification of soils into six classes on the basis of their infiltration rate. Rodier classification takes into account both the soil characteristics and the nature of the vegetative cover.

The US. Soil Conservation Service (Mc Cuen. 1989, Schwab , Frevert et al. 1992) proposed a very detailed classification of soils according to three main criteria:

- hydrological soil group,
- land use,
- treatment class.

The hydrological soil group is based on the grading and the structure of the soil. Land use is defined on the basis of utilization into four main classes:

- fully developed urban areas,
- developing urban areas,
- cultivated agricultural land,
- non-cultivated agricultural land.

Each treatment class is sub-divided into several subclasses. For example, agricultural land is sub-divided on the basis of the cultivation methods used, in line with local agricultural practices (e.g. straight row, conservation tillage, contour ploughing and terraces).

The application of one of the above three classification methods is made easier if a soil survey report for the concerned area already exists. Otherwise aerial photos or satellite images will be required in order to differentiate the watershed into zones according to soil type, utilization, and vegetative cover. After a preliminary interpretation of aerial photographs or satellite images, the findings should be checked in carrying out a field soil survey.

Rainfall

There are two main rainfall characteristics that should be taken into account. The first is the average annual rainfall, its variability from year to year, and its distribution within a single year. These characteristics are used to estimate the storage volume, needed in the case of a retention dam, or to estimate the hydraulic characteristics of the outlet, in the case of a diversion weir. The second concerns the statistics of a single rainstorm relative to various return periods, i.e. the statistically average time interval between single occurrences of a particular event (USBR, 1987; Fiorillo, 1993). The rainstorm characteristics will be used to determine the design flood.

The rainfall characteristics should be calculated from the data collected at nearby meteorological stations. If these data do not exist for the area under consideration, rainfall features should be estimated on the basis of data collected in the stations of neighboring regions with similar characteristics, such as altitude and exposure.

Before designing the hydraulic structure it is necessary to define its design life or 'life expectancy', i.e. the average period the structure is expected to survive before any significant damage (generally caused by extraordinary floods) occurs. The design flood is then calculated as a function of the rainstorm of a selected return period. The spillway is then dimensioned to evacuate this flood. The methods used to calculate the design flood, as a function of watershed and rainfall features, are briefly described below. A complete description of the methods used to collect and process rainfall data is referred to specific reference publications: (FAO, 1981; Roche, 1963; Tonini, 1983).

The depth-duration-frequency curve describes the relationship between depth and duration of rainfall, within a fixed return period. It is derived from the analysis of rainfall data, and is used for runoff computations (FAO, 1981). The depth-duration-frequency curve is approximated by the expression:

$$h = a \cdot t^{b}$$

where:
h and t represent, respectively, the depth (mm) and the duration (hours) of rainfall
a, **b** are two coefficients calculated with a suitable statistical method, e.g. Gumbel (Réménieras, 1972; Roche, 1963) and are a function of the return period.

A prerequisite for using this statistical method is that rainfall depth and duration data, should be available for a period of at least 15 years.

Methods used for estimating the depth of rainfall provide a local value. But, especially in arid and semi-arid regions, rainstorms are not uniformly distributed over the catchment. Then, several relationships allow the value of rainfall data to be estimated and adapted for the whole watershed. Orstom (FAO 1996), on the basis of rainfall data collected during many years, prepared geographic charts for West Africa with isolines for daily and annual rainfall depth for a ten year return period. The following formula is proposed:

$$Pm_{10} = A \cdot P_{10}$$

where:
$\mathbf{P_{10}}$: daily rainfall depth with a ten year return period,
$\mathbf{Pm_{10}}$: rainfall depth adapted to the drainage area,
A: lessening coefficient (<1) function of the watershed area and the mean annual rainfall.

Hydrological methods

The methods used to evaluate runoff characteristics are mainly applicable to small watersheds where the runoff mainly depends directly on the rainstorm.

For a rain falling into a watershed, the corresponding runoff volume can be calculated with the following expression:

$$V = C \cdot S \cdot h$$

where:
C: runoff coefficient, expressed by the ratio of the volume of runoff and the volume of rainfall (C is generally comprised between the extreme values 10 and 80%).
S: watershed area,
h: rainfall depth.

In order to compute the peak flow from the runoff volume, it is first necessary to introduce the concept of the discharge hydrograph which is a graph representing discharge versus time at the outlet of the catchment. A typical hydrograph corresponding to a rainstorm is represented in Figure 2.6.

where:
$\mathbf{Q_{max}}$ is the maximum discharge
$\mathbf{t_c}$ is the time of concentration,
$\mathbf{t_b}$ is the base time.

The runoff volume is represented by the area delimited by the hydrograph and the abscissa time axis. The important parameter is the time of concentration (t_c) which is defined as the time necessary for a raindrop to flow from the farthest point in the catchment down to the outlet.

FIGURE 2.6
Discharge hydrograph

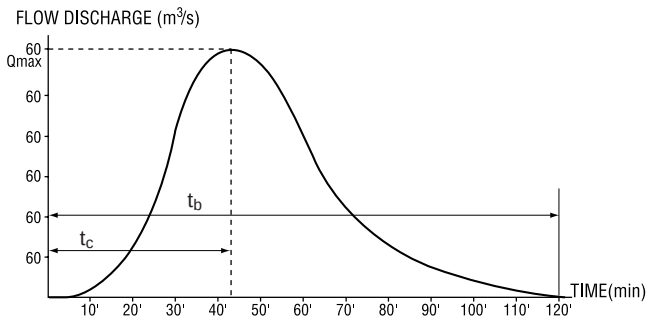

Considering the definition of the concentration time, it implies that if the rainstorm duration is equal or greater than the concentration time, the whole watershed will contribute to the flow at the outlet. In this case the runoff discharge will reach its maximum value and even if the rainfall continues, the discharge rate will tend to be constant. This is only a schematic but effective description of the natural phenomenon of runoff formation. The key hypothesis supporting this theory is that rainstorms are uniformly distributed on the watershed and constant in time.

The concept of concentration time is important in hydraulic works design, in particular for designing and computing the spillway. Its capacity should be dimensioned so as to evacuate the discharge produced by a rainstorm of a duration equal to or greater than the concentration time of the watershed.

Several empirical relationships are available to compute the concentration time. A number of watershed characteristics are needed such as the watershed surface, a parameter related to the catchment slope and, in some instances, another parameter which represents the catchment roughness. Rodier formula (Rodier, Ribstein, 1988) for calculating concentration time, used for small watersheds, is:

$$t_c = a \cdot (S - b)^{0.5} + c$$

where:
S: surface of the watershed (km^2)
a, **b** and **c**: coefficients depending on the Global Slope Index (Roche, 1963; FAO, 1996) and on the permeability class of the watershed.

The main methods used in the determination of the design flood refer to concentration time, or to another time parameter such as the base time which is the total runoff duration. In the rational method for example (Mc Cuen, 1989; Schwab, Frevert et al.,1992; Caroni, D'Alpaos et al., 1982), the following relation gives the maximum discharge rate:

$$Q_{max} = C \cdot i_p \cdot S$$

where:
$\mathbf{i_p}$: rainfall intensity (mm/hour) relative to the time of concentration and derived from the intensity-duration-frequency curve:

$$i_p = a \cdot t_c^{\,k}$$

This relationship can be obtained directly from the depth-duration-frequency curve, with k = b–1.
C: runoff coefficient which is a function of land use, soil group and watershed slope.

The calculation of a design flood with a ten-year return period can be computed with the following formula (Rodier, Ribstein, 1988):

$$Q_{10} = (A \cdot P_{10} \cdot Kr_{10} \cdot a_{10} \cdot S) / t_b$$

where:
A: lessening coefficient (<1),
$\mathbf{P_{10}}$: rainfall depth for a daily rainstorm,
$\mathbf{Kr_{10}}$: runoff coefficient,
$\mathbf{a_{10}}$: peak coefficient,
S: watershed surface (km^2),
$\mathbf{t_b}$: base time (hour).

The values of P_{10}, Kr_{10} and a_{10} refer to a ten-year return period. All the coefficients of Rodier formula can be extrapolated from graphs.

The USSCS method (Mc Cuen, 1989; Schwab, Frevert et al., 1992; Maione, 1995) is probably the most detailed hydrological method used for estimating runoff characteristics. This method is based on a detailed land classification system: a curve number index (CN), is associated with each land category. This index can be corrected as a function of previous rainstorms (antecedent moisture condition). The runoff capacity relative to a particular type of land and to a particular rainstorm depends only on its curve number. There is a relationship between rainfall depth, curve number and runoff depth. There is also a USSCS method for evaluating the runoff hydrograph shape and, consequently, the design flood (Chow, Maidment, Mays L.W., 1988).

The three hydrological methods described above (rational method, Rodier and USSCS) can be used for both small and medium watersheds. They are based on the hypothesis that hydrological characteristics are uniform across the drainage area. In large catchments, however, the likelihood of local variations in retention or infiltration capacity could significantly affect runoff characteristics and more complex hydrological methods should be used for the assessment of runoff. These methods are rainfall-runoff hydrological models which usually consist of dividing the watershed into several sub-catchments. The runoff characteristics of each sub-catchment is then determined using the simple methods described above (rational method, Rodier or USSCS). Then a flood routing procedure is used to calculate the runoff hydrograph at the outlet.

The Centre inter-africain d'études hydrauliques (CIEH), proposed a method based on statistical data for calculating the design flood with a ten-year return period (FAO. 1996):

$$Q_{10} = a\, S^{s}\, P_{an}^{p}\, I_{g}^{i}\, Kr_{10}^{k}\, D_{d}^{d}$$

where:
Q_{10}: 10-year return period peak flow
S: watershed surface,
P_{an}: mean annual rainfall depth,
I_g: global slope index,
Kr_{10}: runoff coefficient,
D_d: drainage density,
a, **s**, **p**, **i**, **k** and **d** are coefficients calculated from multiple linear regressions.

Rodier and the CIEH (FAO. 1996) proposed specific expressions to convert, if necessary, the calculated value of the ten year return period design flood to that of a different return period.

When designing important hydraulic structures, it is recommended to compare the value for the design flood derived from different methods.

The first method estimates the maximum discharge (using Manning-Strickler formula) that can flow in the outlet as a function of the characteristics of the streambed (e.g. longitudinal slope, roughness, and maximum water depth and cross section area). The maximum discharge rate should then be compared to the design flood values estimated from one or more hydrological method(s).

For important hydraulic works, it is recommended also to install a hydrological station at the outlet of the watershed to measure the discharge. The measured discharge together with the relative rainfall depths, should then be compared to the results obtained with the application of the hydrological method.

EROSION AND SEDIMENT TRANSPORTATION

Solid transportation at the outlet of the watershed depends on two main factors:

- production of sediments in the drainage area,
- flow carrying capacity for solid transportation in the drainage channel.

The production of sediment depends on the soil group, land use and agrarian practices in the watershed; it is normally quoted in ton/ha·year. It is generally enhanced by artificial or natural erosion phenomena, caused by local agricultural practices and the erosive effects of rainwater. Several methods have been developed to estimate the annual volume of sediment produced in a watershed.

The second factor concerns the capacity of minor and major streams to transport to the outlet the volume of sediment produced in the watershed. Several formulae can be used to calculate the characteristics of the transported solids in a stream (Mc Cuen, 1989; Tonini, 1983). Some stream features, such as cross section, longitudinal slope and flow rate, should be known in advance for the computation of solid transportation characteristics such as the volume and the particle size distribution of the transported solid.

Transported solids can strongly reduce the storage volume of a retention dam. It may be necessary to reduce the transported solids to a reservoir with the construction of one or several check dams located upstream of the site in order to retain the sediments before they reach the main dam.

Several methods are available for the measurement of transported solids rate in a streambed, with the utilization of proper sampling devices (FAO 1981, FAO, 1993; PAP RAC, 1997). However, it is difficult to obtain precise measurements, since transported solids are usually at their highest concentration in conditions of high floods. Under such circumstances, ordinary transported solid sampling devices may not be used as access to the flow is often dangerous or even impossible.

Evaporation

Evaporation depends on air temperature, solar radiation, wind speed and local humidity (Mc Cuen, 1989, Moisello, 1985). FAO (1992 and 1998) has relevant publications for the calculation of the evaporation from an open surface of water.

In arid and semi-arid regions, annual evaporation losses represent a significant percentage of the total storage volume. Water depths equivalent to the annual evaporation of a reservoir is of the order of 1.50 to 3.00 metres and thus represents an important term in the water balance computations.

Chapter 3

Geotechnical investigations

Purpose of geotechnical investigations

Geotechnical investigations are carried out to provide geotechnical data representative of the ground conditions at the site and, of relevance, to the development under consideration. Specific objectives are laid down in many country's standards, for example, BS5930:1981 British Standard Code of Practice for Site Investigations. These have been adapted below for use in rural development situations:

- to assess the suitability of the site and its environs for the proposed works
- to enable an adequate and appropriate design to be prepared, including the design of temporary works
- to plan the best method of construction and to explore sources of indigenous construction materials
- to determine the changes to the site and its environs that may arise as a result of the works

The most important aim of the subsurface investigation is to establish the soil, or soil and rock, profile at the site, i.e. What layers of soil and rock exist in the foundation and the reservoir areas? What are their respective thicknesses, orientation and relationship to each other? What are their engineering properties? What are the ground water conditions? Are there suitable sources of construction materials in the vicinity of the site?

Scope of ground investigation

The technical scope, or extent, of the investigation is controlled by two main factors:

the character and variability of the ground
the nature of the project

Other factors may also be important. These may include the topography and its implications for access by mechanical equipment, the local availability of certain types of investigation equipment, the confidence in the quality and representability of information that has become available as a result of desk study and geomorphological (surface) mapping, and the available funding.

Character and variability of the ground

The character and variability of the ground should be established in outline terms during the desk study and reconnaissance survey. These are discussed more fully in Chapter 2 and both of these tasks are an essential first part of any investigation, although often neglected. If they are carried out well they not only help to save costs by contributing towards an efficiently planned subsurface investigation, but help to reduce the risk that unexpected problems may become apparent at later stages in the project.

Nature of the project

The nature of the project defines the particular components that require investigation, the layout of the investigation points and the type of engineering design data that is required. The investigation for a dam project needs to consider the following components:

- the embankment dam or gabion weir, the associated spillway and the stilling basin immediately downstream, where the spillway flow energy is dispersed;
- the area of the reservoir impoundment including the slopes around the reservoir;
- potential sources of materials in the area for earth or rock fill, gabion stone, filter, rip-rap and concrete.

Other works are often associated with the dam. These may include an access road, a pump house or a pipeline or canal to direct the impounded water to a water turbine or irrigation area. These and associated investigation requirements are not considered in this publication.

Embankment dam

Dam sites are usually selected at constrictions of valleys. Such constrictions are often due to changes in the geological conditions, and may include the presence of geological faults. Such faults are often located along the axis of the valley and, therefore, may provide zones of potential water flow or leakage under or around the dam. They may also be a boundary between different soil or rock types.

The embankment, properly designed and constructed, must have stable upstream and downstream slopes and it should not settle to any great extent. Two factors affect this, firstly the foundation soils must be strong enough to provide a suitable bearing capacity and secondly the fill material for the embankment must be carefully selected. This may comprise earth or rock-fill or a combination of the two.

Usually, the survey of surface geology (Chapter 2) will provide the best basis for the initial location of trial pits or boreholes. Exploratory holes should be located across the valley at the dam location and each rock or soil type should be adequately represented by at least two boreholes. In many cases there may be no previous geological information and so the planning of the investigation should remain flexible so that exploratory hole locations can be modified, and/or added to, as information becomes available during the progress of the investigation. Typically, an initial hole spacing of approximately 50 m may be adopted but this could be modified depending on the complexity of the ground conditions revealed.

Each exploratory hole should extend to a depth of at least twice the minimum dimension of the base of the dam (usually the base width measured along the axis of the valley). This is the zone of maximum increase in stress in the sub-soil under the bearing pressure of the dam, and the strength and settlement characteristics of the materials throughout this depth will need to be established. This is also the zone where the permeability of the foundation soils is critical. If, at this depth, the material encountered is weak (e.g. organic clay) and/or highly permeable (e.g. sand and gravel) the depth may have to be extended. However, if an apparently stronger or impermeable stratum is encountered at shallower depth the exploratory holes should not be terminated prematurely.

A typical investigation may begin with four or five exploratory holes across the valley, two additional holes at each abutment and additional exploratory holes both upstream and downstream to assess the conditions under the upstream and downstream shoulders and in the spillway and stilling basin. Additional investigation would depend on the results of these initial exploratory holes. However, for final design, additional exploratory holes in the valley bottom, in the abutments and in the locations of the associated structures may be required.

The permeability of the materials should be measured by in-situ permeability testing, which may include falling, rising or constant head permeability testing, packer or Lugeon testing.

In granular (non-cohesive) materials, *in-situ* standard penetration tests should be carried out and disturbed samples should be taken for measurement of their particle size distribution. In cohesive soils undisturbed samples should be taken and subjected to classification and undrained shear strength testing, and in some cases consolidation testing. In rock, rotary core drilling will be required to provide continuous core samples for detailed description and testing.

Reservoir impoundment area

The proposed final water level at the completion of the impoundment should be known, at least approximately, at the time of the investigation. This is important because investigations of the reservoir area will need to be made to establish ground water levels in the surrounding catchment to determine if leakage will occur after impoundment. Clearly if the free water level in the reservoir is higher than ground water level in the valley sides water loss will occur. These measurements will also be necessary to model the effect of the increase in groundwater level during impoundment on associated increases in pore-water pressure because this will influence the slope stability around the reservoir sides.

Such investigations will require boreholes in the valley sides to extend to the level of the valley floor and piezometers will need to be installed to measure the change in groundwater level with time. The opportunity should be taken to read these at regular intervals throughout the investigation, design and construction periods.

The stability of the slopes around the reservoir will depend on the material type and on their shear strength under effective stress conditions. Undisturbed samples should be taken for effective shear strength testing.

Borrow areas

Preliminary exploration to determine suitable borrow areas for dam construction can be divided into two categories:

- to locate specific selected materials such as aggregates for concrete, filter material for drains and transition layers, blanketing or lining material for canals and upstream blankets, stone for gabions and rip-rap for protection of the upstream face of the dam;
- to locate comparatively larger quantities of material for the embankment fill.

The availability of local construction materials may have an important influence on the type of dam construction. These types have been outlined in Chapter 1. An earth dam requires a relatively impermeable material, such as a clay, to form the impermeable core of the dam and a more general fill to form the shoulders. If clay is in plentiful supply it may be used for the whole embankment. If no clay is available within the immediate area it will have to be imported or a

man-made alternative will have to be considered. Such alternatives may include the use of bituminous coatings or geomembranes. The shoulders of the dam which support the core may be of compacted soil or rock-fill. Gabions will require a source of suitable rock or coarse granular materials of cobble or boulder size.

Borrow areas can cover wide expanses of land and are visually intrusive. Therefore, if at all possible these areas are best exploited from within the reservoir area so that they are masked when the reservoir area is impounded. Potential source areas are initially located on the basis of the desk study and walkover survey. Investigations for borrow areas in soil materials are best carried out by excavating trial pits or trenches either by hand or with mechanical excavators. These give the best indication of potential variations in properties of the material both with depth and laterally. Such pits should be excavated at regular intervals on a grid basis, the spacing between pits may start at, say, 50 m intervals and this can be modified once the degree of variation in the borrow material becomes apparent.

The effectiveness of the soil material as an impermeable or supporting fill depends to a considerable extent on the effectiveness of its compaction. Compaction depends on its particle size distribution and plasticity and these properties will need to be measured. The variation in compacted dry density with moisture content and the natural moisture content will also be required so that a compaction method can be designed.

For sources of rock-fill rotary cored boreholes will be necessary to the full potential depth of the excavation. It will be necessary to determine the depth of weathering which will affect the quality of the rock, particularly its strength and durability. Joint patterns and their spacing are also important as these (together with the strength) will affect the method of excavation and the type of excavation and processing equipment that will be required.

Methods of ground investigation

Exploratory holes

Trial pits

Trial pits are an economic method for shallow exploration and for inspecting *in-situ* soil conditions and they allow a relatively large face in the in-situ material to be inspected. Personnel should only be allowed in unsupported pits at depths of less than 1.5 m. At greater depths support should be used. In non-cohesive soils pits are normally only possible to depths above the groundwater table.

With modern excavation equipment back-hoe type excavators can dig to depths of about 6 m to 8 m. For investigation of borrow areas for fill or natural sand and gravel the use of trial pits allows a regular grid of exploration points to be constructed rapidly and allow representative bulk samples to be obtained for subsequent testing.

An example of a trial pit record is given in Figure 3.1.

Soft ground boreholes

Borehole exploration in soft ground allows sampling and in-situ testing to be carried out. The light cable percussion boring rig is capable of achieving depths of up to about 50 m. It comprises an engine-powered winch and tripod frame which is collapsed for transportation and can be towed behind a light four-wheel drive vehicle (Figure 3.2).

FIGURE 3.1
Example of a trial pit log

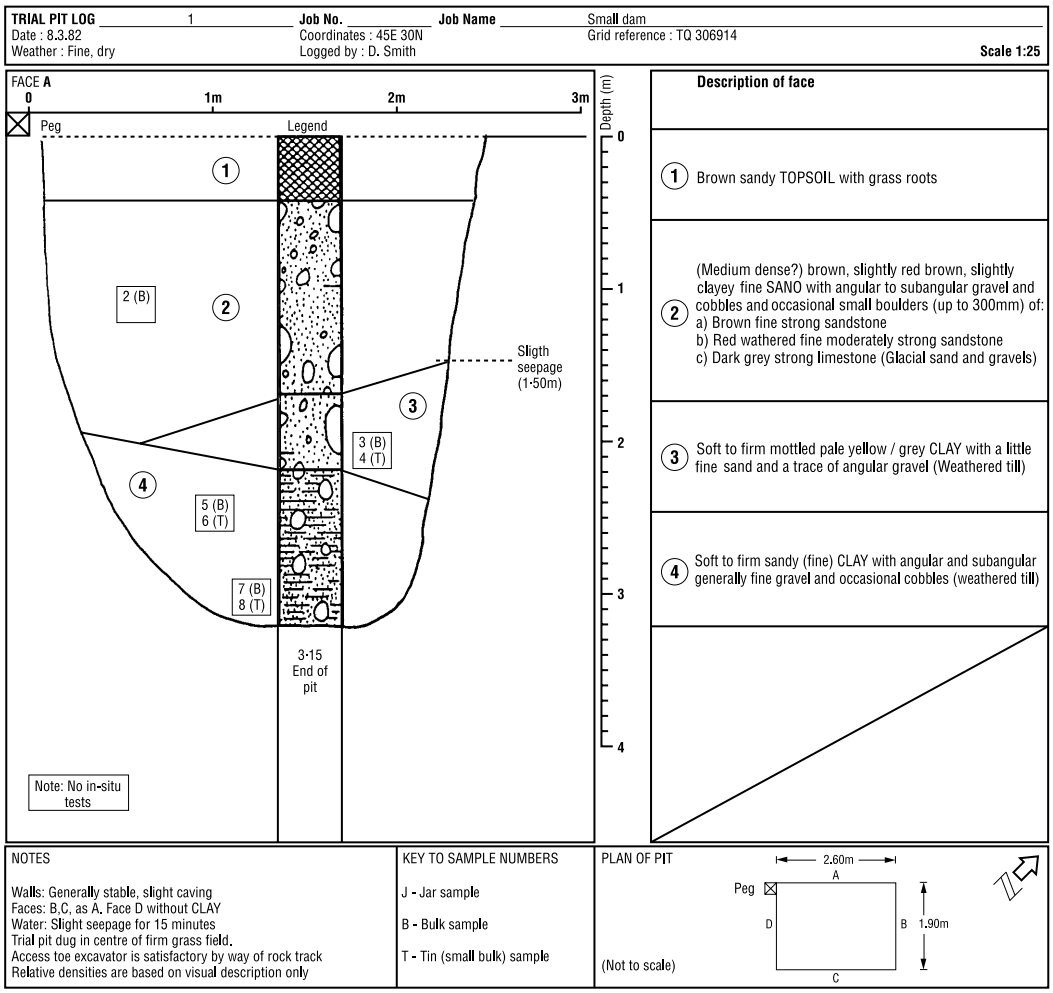

Boreholes are advanced by the percussive action of cable tools lowered and raised by the winch. Examples of the range of tools are given in Figure 3.3. In non-cohesive or soft cohesive soil the boreholes are supported by tubular casing, screwed together as required. In cohesive soils a clay cutter tube is dropped by the winch to cut a plug of soil which is then raised and removed from the tube at the ground surface. In non-cohesive soils a shell is dropped which contains a valve at the lower end. The shell penetrates into the soil and as it is raised the valve closes thereby allowing the soil to be brought to the surface.

Standard tools are also available to allow the undisturbed sampling of cohesive soils or the carrying out of in-situ standard penetration tests (SPT's) in granular soils (Figure 3.4). If obstructions are met in the borehole, such as large boulders, chiseling tools can be attached to allow the boulder to be broken up.

FIGURE 3.2
A light cable percussion boring rig

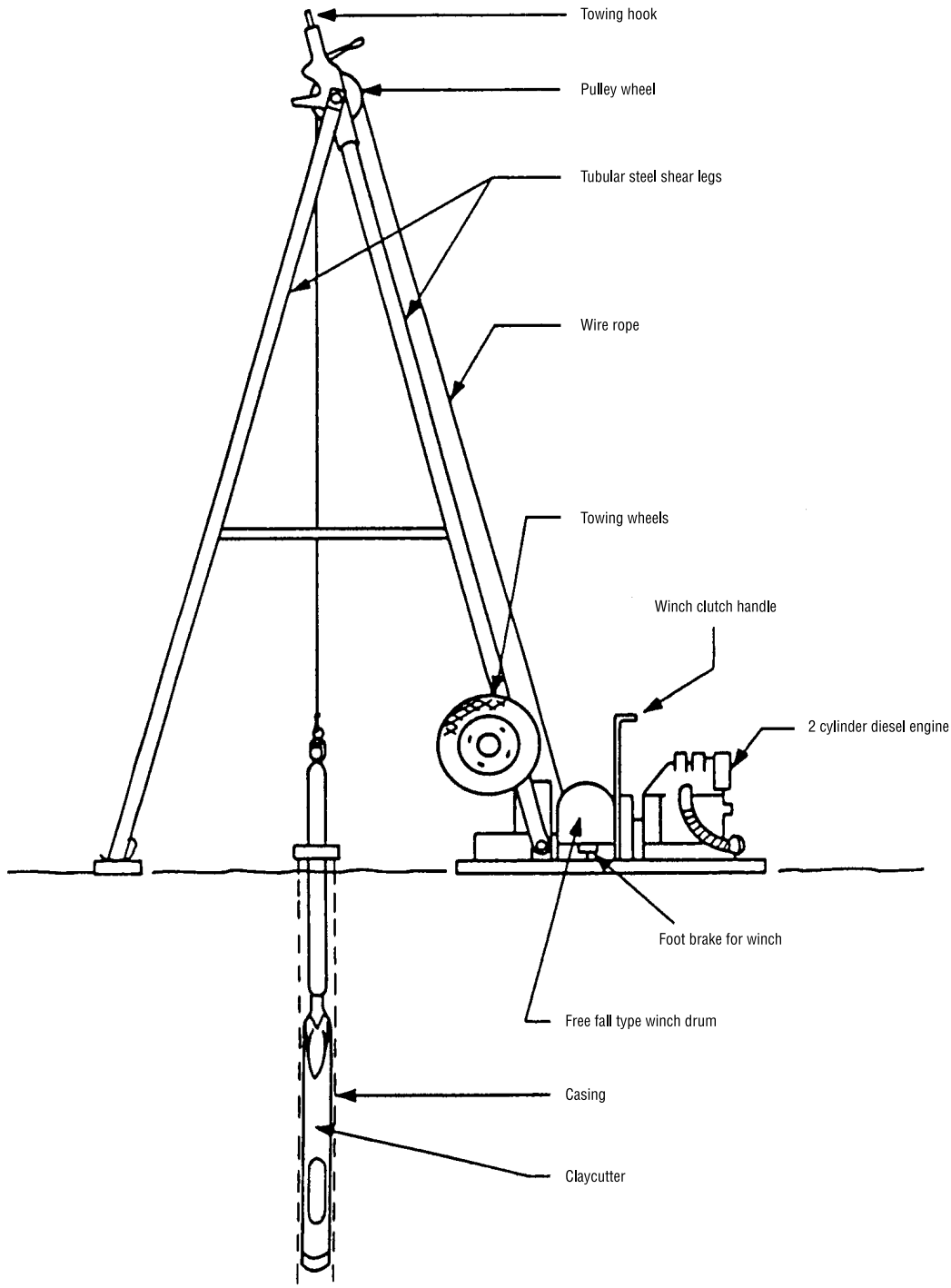

It is important that the boring exercise is closely supervised and that the soil layers can be described in detail and the depths of changes in soil type are recorded. Complete groundwater information must be recorded such as groundwater level at which water was lost, water under pressure was encountered, etc. In sandy soils, the water level should be recorded at least 30

FIGURE 3.3
Examples of cable tools used in percussion boring

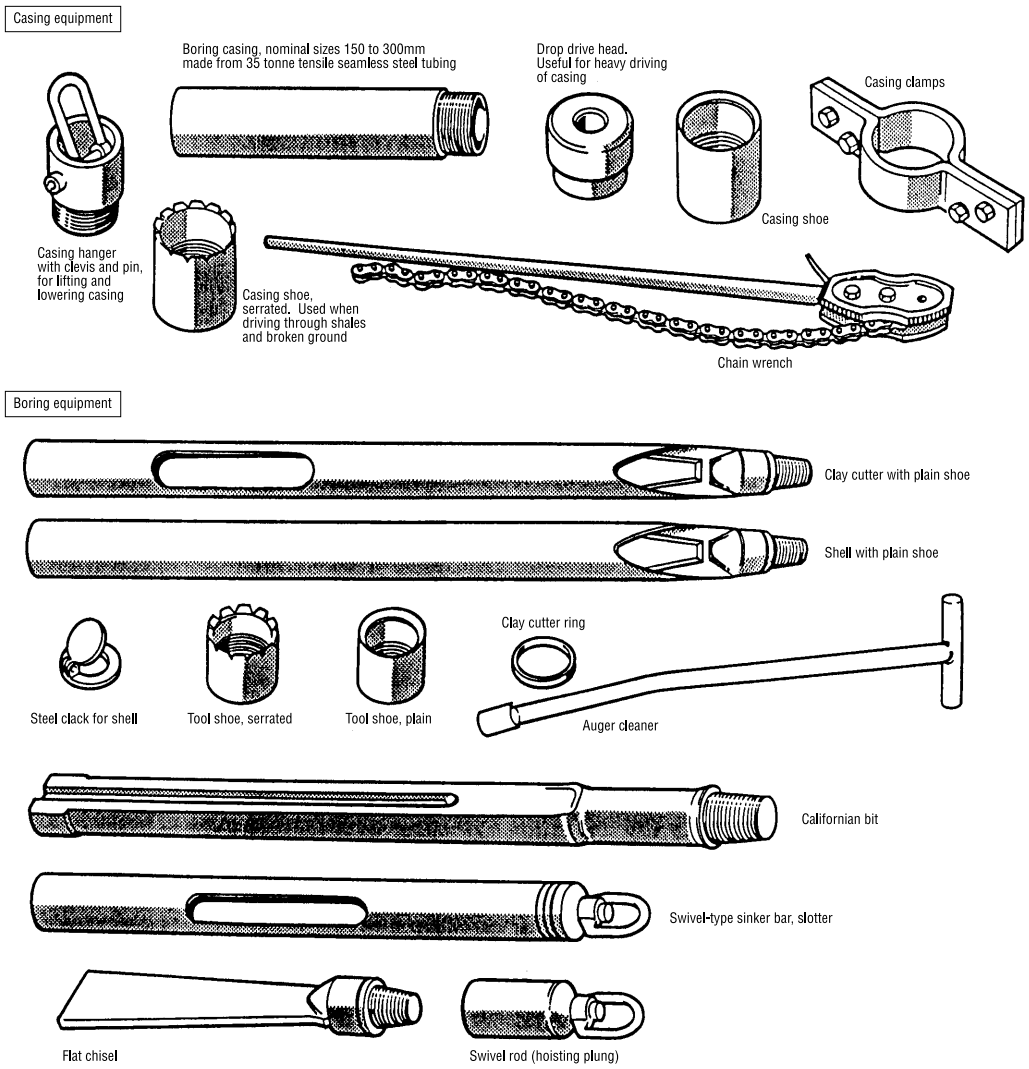

minutes after the boring is completed and in silt, after 24 hours. In clays it may be difficult to obtain an accurate measurement unless pervious layers are present. However water levels in clays should be taken at least after 24 hours. If groundwater is not encountered, it should also be reported.

All data measured in the borehole should be recorded on the borehole log.

Rotary cored drill holes

Rotary cored boreholes are used for drilling in rock to obtain continuous rock core samples. Hollow drill rods are attached to a rotary drive and at the bottom end to a core barrel fitted with a tungsten or diamond set cutting bit (Figure 3.5). Core moves into the barrel as the bit cuts an annular hole around it and the core is retained in the barrel by a sprung steel collar. Downward pressure and the speed of rotation is controlled hydraulically. Drilling fluid is used to cool the cutting bit and to flush the rock cuttings to the surface.

FIGURE 3.4
Examples of undisturbed sampling and standard penetration test equipment

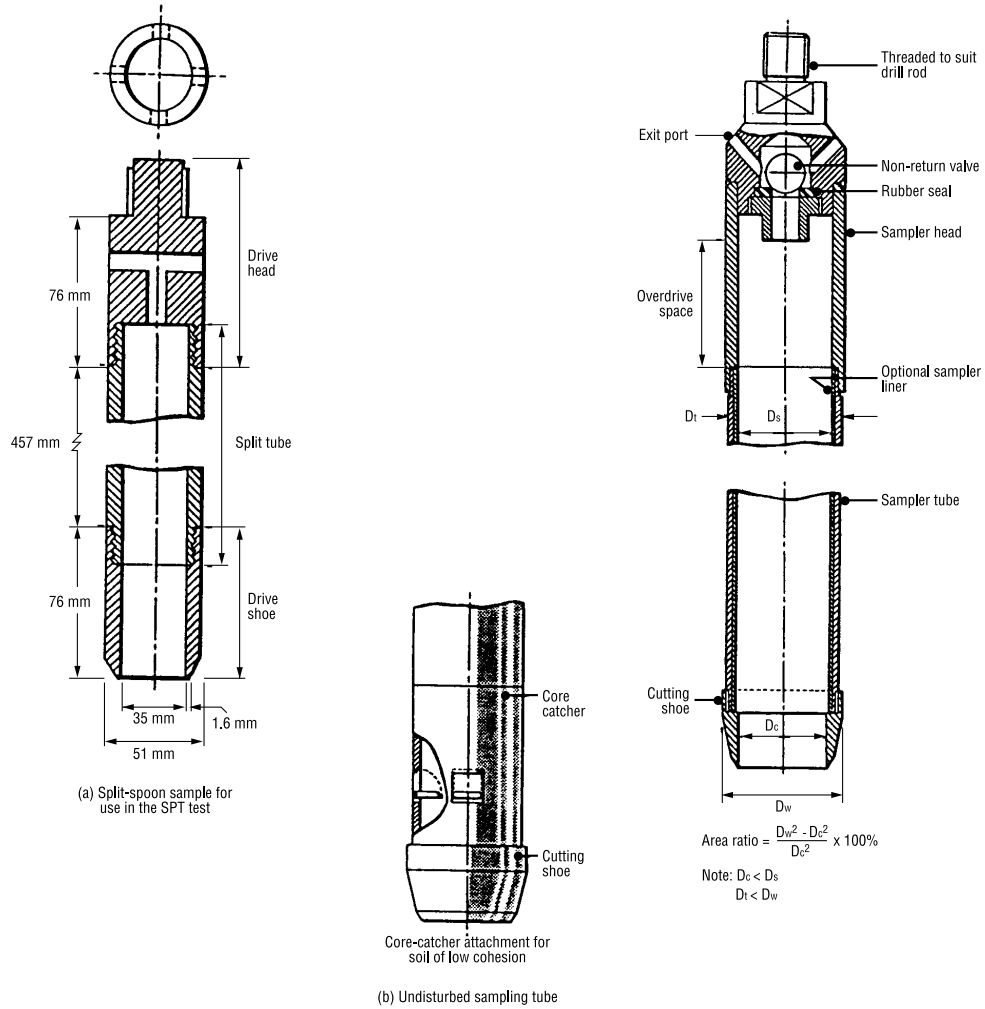

The rock cores are removed from the barrel at the ground surface and stored in wooden boxes for detailed logging.

An example of a borehole log for cable percussion and rotary core drilling is given in Figure 3.6.

Methods for taking samples

Undisturbed samples are collected when the original structure of the soil in its natural state needs to be preserved. This generally applies to cohesive soils. Undisturbed samples will be required for detailed visual examination of the soil structure and for testing to determine the natural moisture content, the in situ density, the shear strength from triaxial tests and settlement characteristics from consolidation tests. Laboratory permeability tests may also be carried out.

Typical types of undisturbed samples are:

FIGURE 3.5
Examples of drilling bits and core barrels for use in rotary core drilling

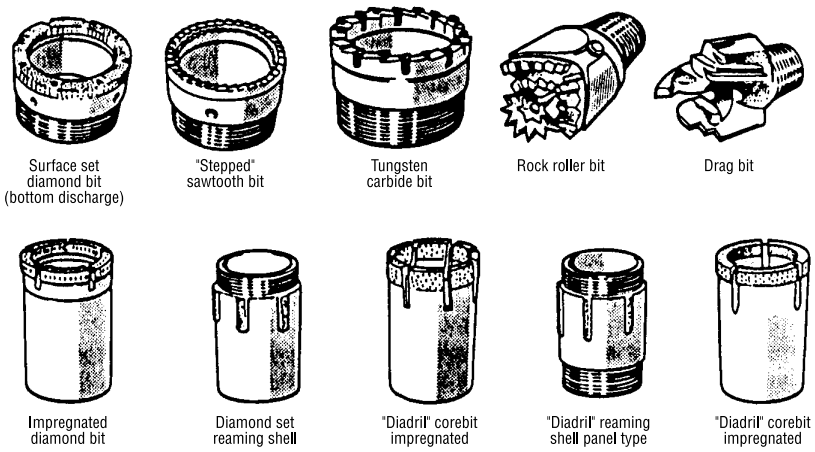

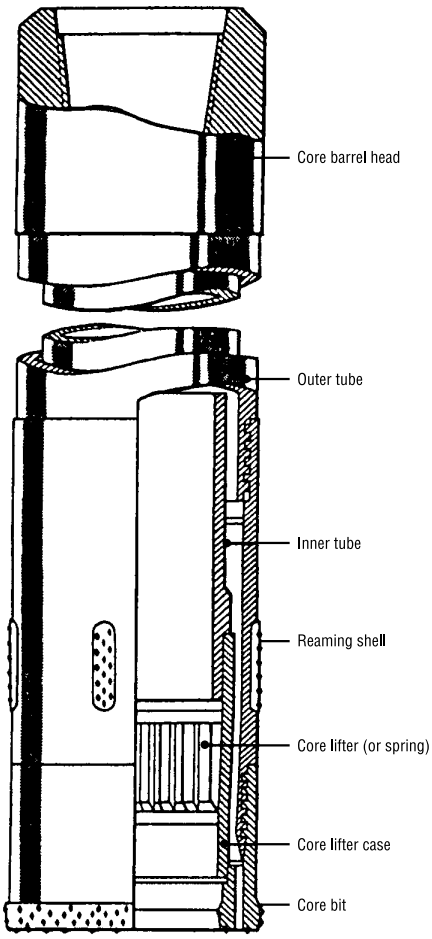

FIGURE 3.6
Example of a borehole log

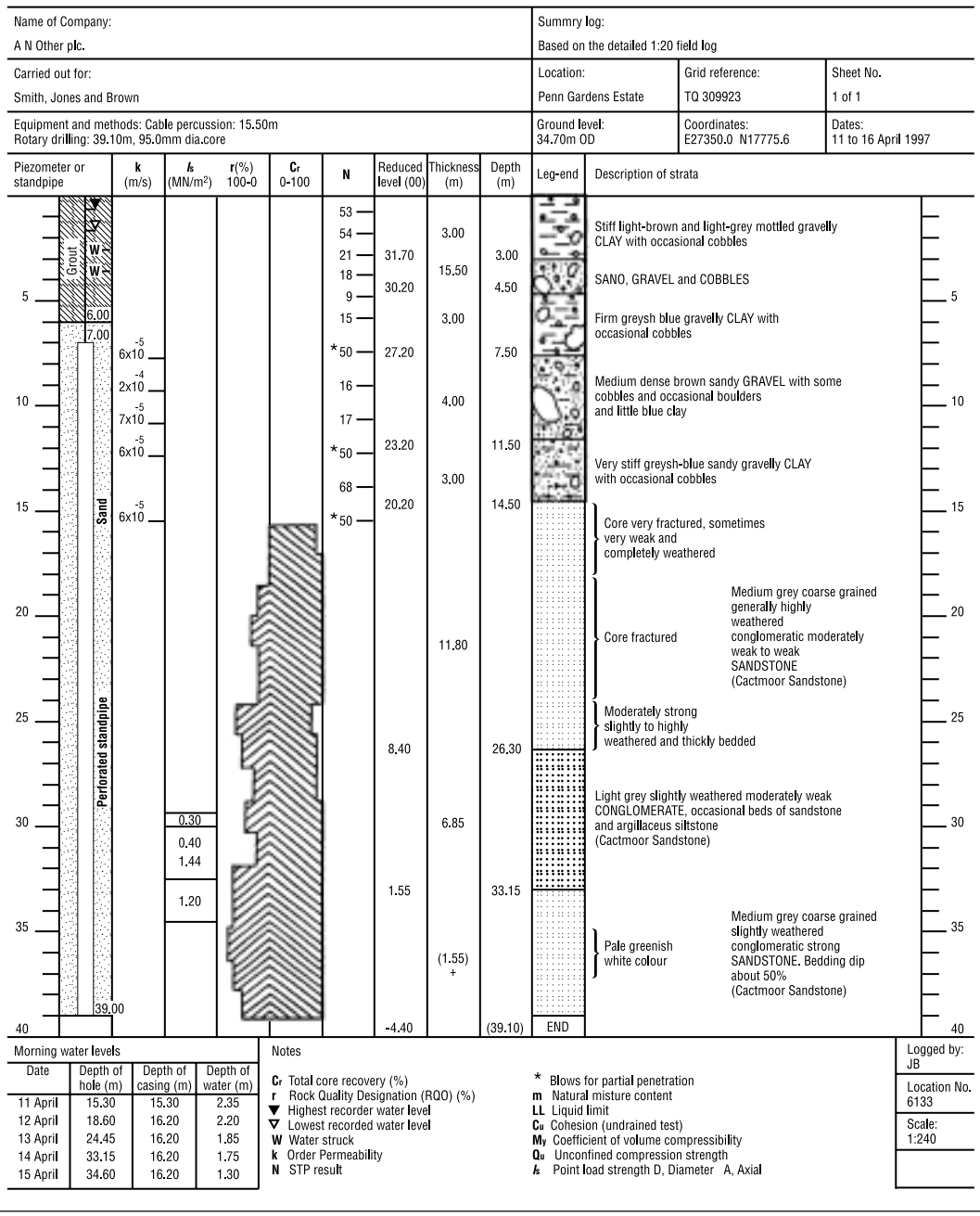

- open-end tube drive samples from boreholes (“Shelby” type);
- large block samples cut from test pits.

Undisturbed samples are usually collected from each cohesive soil type encountered in the foundation and at intervals of 1.5 m.

Large disturbed samples are collected from non-cohesive soils at intervals of 1.5 m when the natural conditions of the soil are relatively unimportant, i.e. where the soil will be reworked

during construction. It is important that the sample be representative of the whole depth interval and that several samples be collected from each layer of the material.

Small disturbed samples are usually collected for identification purposes from every stratum encountered in the exploratory hole and at intervals of at least 1.5 m, between undisturbed or large disturbed samples. The sampling and logging methods in exploratory holes are described below.

Taking disturbed samples in test pits and trenches

A vertical area in the side of the test pit should be trimmed in order to remove all weathered or disturbed soil. The trimmed surface is then examined in order to determine the sequence, and the thickness and type of each stratum of soil. The materials should be described in detail and standard methods of description and classification should be used. Examples of such methods are the British Soil Classification System (BS5930:1999) and the Unified Soil Classification System. This information together with the number of samples taken and the depth of each should be recorded on a suitable log form (see Figure 3.1).

Each sample is obtained by trenching a uniform cross-section into the vertically trimmed side wall of the pit and collecting the soil sample on a canvas spread on the pit bottom. The minimum dimension of an undisturbed sample should be greater than four times the diameter of the largest gravel particle in the soil. When sampling an individual soil stratum, special care is required to prevent inclusion of material from other strata.

For soils containing 25% or more of particles exceeding 75 mm it is usually advantageous to take representative portions of the total excavated material, such as every fifth or tenth bucketful, over the total depth sampled, rather than from a sample taken from the side wall of the test pit as described above. When the quantity of the collected sample is larger than for testing needs its size may be reduced by first rolling and mixing the samples in order to obtain a uniform mixture, and then by quartering on a canvas. Partial mixing of the sample can be achieved by two or more workers holding opposite corners of the canvas and lifting one side of the canvas at a time in order to roll the sample towards the opposite side. This procedure is then repeated several times in reverse order so as to ensure complete and uniform mixing throughout the sample and to obtain a uniform graduation. The heap is then flattened to a uniform thickness and marked into quarters by two lines intersecting at right angles at the center. Two diagonally opposite quarters are removed and the remaining material is mixed again and the above procedures repeated until the desired sample weight is obtained.

If the material is wet and contains fine silt or clay-sized material precautions should be taken to avoid loss of fines. Use of large plastic waterproof sheets is recommended.

Taking undisturbed samples in test pits and trenches

In test pits or trenches, hand-cut samples can generally be obtained with minimum soil disturbance and, since the excavation is accessible, representative strata can be selected prior to sampling. However, unsupported test pit excavation is limited for safety reasons to depths of less than 1.5 m and supported pits can only be excavated to depths of up to approximately 6 m. For greater depths, or depths below the water table, the cost and difficulties of excavation, support and pumping usually make hand sampling impractical and uneconomic. Under these conditions boreholes are more practical and cost effective together with undisturbed sampling by drive tube. It must always be kept in mind that the primary purpose of these operations is to obtain an undisturbed sample of an adequate size for laboratory testing. Therefore, the methods and type

of sampler selected must be best suited to soil conditions, type of soil consistency and water content.

Field equipment for sampling in test pits

- Standard excavating tools: shovel, pick, trowel, large-size knife, small thin-blade paring knife, heavy-duty hacksaw, blades and thin piano-wire to cut soft plastic soils;
- Sample containers: cubical wooden boxes of suitable size to fit samples with sufficient space for packing material, metallic tubes;
- Cheesecloth or other cloth wrapping material. (Under dry climatic conditions, moist cloths must be provided to protect the sample while it is being cut);
- Sealing wax, heater and paintbrush;
- Sawdust or similar packing material.

After the sample is cut and trimmed to the desired size and shape, it is wrapped in cheesecloth and painted with warm melted wax. Following the wax application, it should be rubbed with the hands in order to seal the pores. One or two more wrappings of cloth and wax should be applied.

For easily disturbed soils, a wooden box with both ends removed should be placed over the sample before it is cut from the parent material and lifted for removal (Figure 3.7). Space between the sample and the walls should then be filled with moist sawdust or similar packing material.

FIGURE 3.7
Block sampling from a trial pit

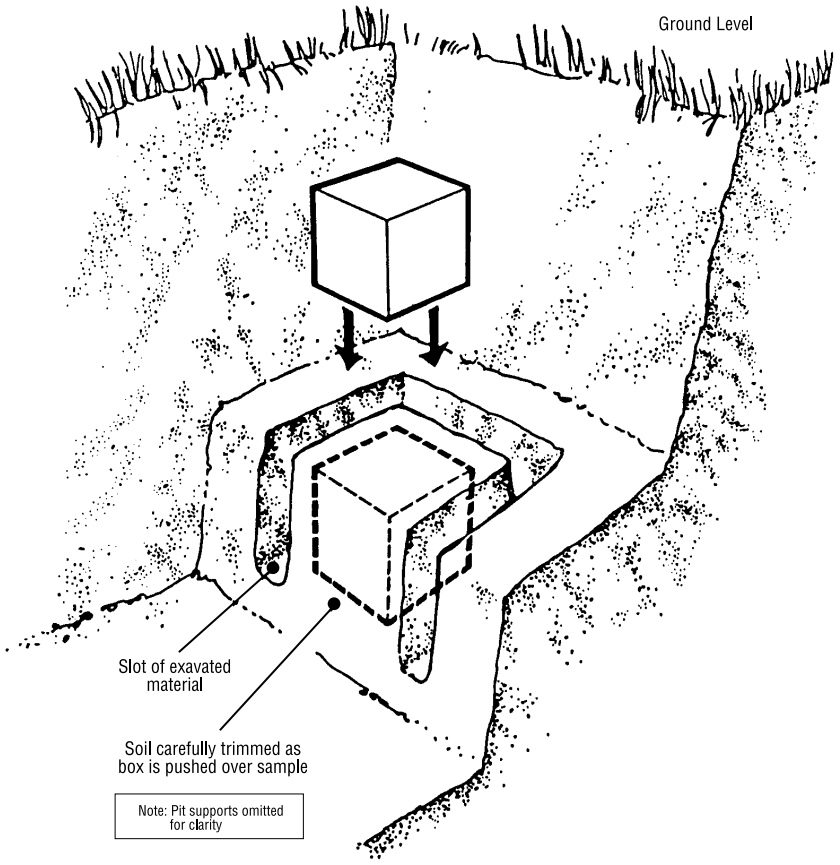

Undisturbed sampling in boreholes (drive tube method)
The drive tube method is commonly used to explore foundation soils. Sample disturbance is limited and is therefore suitable for visual examination.

In its simplest form, a drive sampler is a piece of open pipe, sharpened at one end, which is forced into the soil by hydraulic pressure, jacking or driving; although this method produces relatively undisturbed samples, it is suitable only for visual examination and identification tests.

With more specialized equipment, undisturbed samples suitable for laboratory testing can be obtained. The basic principle is to force a thin-wall cylindrical tube into the undisturbed soil, taking care to clean the bottom of the hole before sampling. The thin-wall, open drive sampler consists of a thin walled tube (see Figure 3.4). It is equipped with an head having vents for escape of the drilling mud or the circulating water and with a ball check valve to prevent the entrance of drilling mud during lifting of the sampler and to assist this procedure in creating a partial vacuum to retain the soil core inside the sampler. The head is connected to the drilling rods.

This type of sampler is suitable for sampling most cohesive soils unless they are too hard, cemented, or too gravely for sampler penetration. This type of sampler is not suitable for soils that are very soft and wet. These cannot be retained in the tube and more specialized equipment is required.

When carrying out thin-walled tube sampling the following general procedures should be followed:

- The sampling tube must be smooth and thoroughly cleaned inside and outside before sampling. The tube edge must be properly sharpened and have the correct inside clearance for the soil being sampled.
- The drive should be made without rotation and with a continuous force.
- The length of drive should always be shorter than the length of the sample tube in order to ensure that the sample is not compressed inside the tube.
- The sampler should be rotated to break the soil at the bottom.
- The sampler containing the soil sample should be carefully removed from the hole to avoid losing the sample. Disturbance by jarring must be avoided. Expanding packers are provided for sealing the ends. Wax can be used if expanding packers are not available.
- The sample must be clearly marked and labeled.

In-situ tests in boreholes

In-situ standard penetration test (SPT)
The designation E 21 USBR (USBR 1967) is a procedure to obtain a measurement of the subsoil resistance to the penetration of a standard sampler and to provide small disturbed samples of the soil for identification purposes only. The test and identification information are used to outline subsurface conditions with respect to bearing capacity of a soil for foundation design.

The penetration resistance (N) is expressed as the number of blows of a 63.5 kg hammer falling freely from a height of 76 cm, required to force the sampler 30 cm into the soil. The penetration sampler is shown in Figure 3.4. The sampler must be clean and lightly oiled before each test. The outer wall, inner wall or liner, and cutting bits must be smooth and free from scars made by tools and rocks. The drive hammer assembly comprises a 63.5kg weight, a guide pipe

long enough to allow for a 76 cm free fall, and a jar coupling (connection between the guide pipe and sampler rod for hammer to strike). Various types of drive hammer are commercially available. The best is an automatic-trip type that allows better control of the weight and drop height.

Before carrying out the test the base of the borehole should be cleaned with the drilling tool in order that the soil to be tested is not disturbed. If an obstruction such as a boulder is encountered, it should be removed by a chopping bit or should be drilled through. Where the hole is lined with casing for support, it should not be driven in advance into the layer to be tested or sampled.

The standard sampler is attached to the drilling rod, each rod joint is securely tightened, and it is lowered to the bottom of the hole. The jar coupling, guide pipe and drive hammer are then fixed to the sampler rod string and the hammer is allowed to fall onto the jar coupling so that the sampler penetrates the soil.

The number of blows required to drive the sampler each 75 mm over a total depth of 450 mm is recorded. The first two increments (150 mm) is discounted as a 'seating drive', i.e. to account for the initial zone below the borehole base that may be disturbed. The remaining four increments are then totaled to give the number of blows for 300 mm. This is the penetration resistance (N).

Fifty or more falls for 30 cm penetration indicate a very dense (cohesionless soil) or a very stiff cohesive material. In this case, the penetration test should be stopped after 50 free falls and the penetration resistance should be computed as 50/d where d is the actual depth penetrated.

When testing granular material below the water table, the water level in the borehole should be maintained at, or above, the ground water level. A correction is often applied to SPT values in excess of 15 when assessing the relative density of silts and fine sands below the water table.

The expression is given below:

$$N_{corrected} = 15+1/2 \cdot (N-15)$$

Immediately after completion of the penetration test, two samples of the bottom 30 cm soil core must be placed in airtight containers which should be sealed with waterproof adhesive tape to prevent loss of the soil moisture. The container must be marked with the sample number, date, project, structure, hole number, location, depth or elevation at which the sample was taken, the penetration resistance record, amount of sample recovered and classification of soil.

Estimation of relative density and angle of shearing resistance of granular soils and the shear strength of cohesive soils from the SPT

The shear strength of granular (non-cohesive) soil is defined in terms of the frictional resistance between the grains, measured by the angle of shearing resistance. The relationship between SPT N value and the relative density and angle of shearing resistance is indicated in Table 3.1 where typical values of shearing resistance, j', and relative density for sand and gravel are given.

TABLE 3.1
Derivation of parameters for granular soils from the Standard Penetration Test

Soil condition	N SPT	Relative density	φ'
Very loose	< 4	< 0.2	< 30°
Loose	4 - 10	0.2 - 0.4	30° - 35°
Medium dense	10 - 30	0.4 - 0.6	35° - 40°
Dense	30 - 50	0.6 - 0.8	40° - 45°
Very dense	> 50	> 0.8	> 45°

The undrained shear strength of cohesive soils can also be derived from SPT values. This is a more approximate relationship but typical values of c_u (kg/cm^2) for clay soils is given in Table 3.2.

TABLE 3.2
Derivation of parameters for cohesive soils from the Standard Penetration Test

Soil condition	N SPT	c_u (kg/cm^2)
Very soft	< 2	< 0.20
Soft	2 - 4	0.20 - 0.40
Firm	4 - 8	0.40 - 0.75
Stiff	8 - 15	0.75 - 1.5
Very stiff	15 - 30	1.5 - 3.0
Hard	> 30	> 3.0

The bearing pressure exerted by an earth or rock-fill embankment dam is approximately 0.2 kg/cm^2 for each metre in height. The safe bearing capacity of the sub-soil can be calculated from the soil shear strength values derived from SPT tests. It is essential that the bearing pressure does not exceed the safe bearing capacity of the sub-soil or there will be a risk of shear failure through the foundation and loss of integrity of the structure.

In situ permeability testing

In-situ permeability tests in boreholes are used to determine the permeability of the soil or rock below the water table. The principle behind the various methods is to apply a pressure head difference between the water in the borehole and that in the ground and then to measure the resulting flow.

In open boreholes both variable head and constant head tests can be carried out (Figure 3.8). In the variable head tests the existing water level can be lowered by pumping out and after stopping the pump the rate of return of the water to the original level is measured - this is the rising head test. Alternatively the existing water level can be raised by pumping in water and after the pump is stopped the rate of return of the water to the original level is measured - this is the falling head test.

The rising head test can overestimate permeability because the flow of water into the borehole can bring in the finer soil particles from the surrounding soil or remove in filling from fissures in rock and therefore raise the permeability of the surrounding material. The falling head test, in contrast, can underestimate permeability because the water flow can move fine material into the soil surface or rock fissure thereby reducing permeability. It is preferable, if possible, to carry out several of each type of test.

If the permeability is relatively high the rate of flow may be too rapid to enable measurements to be taken. In these situations the constant head test may be more applicable. In this case water is pumped into the borehole and the flow rate adjusted to keep a constant water level in the hole at a convenient datum.

In rock which stands unsupported in the borehole, and particularly where an estimate of the grout acceptance for the rock is needed, packer or water injection tests can be used (Figure 3.9). These involve the sealing of a length of borehole between inflatable packers and the injection of water under pressure into the sealed length of hole. Single packers enable the bottom section of a borehole to be isolated for the test. Alternatively, double packers allow any chosen section of the borehole to be isolated.

FIGURE 3.8
Falling and rising head tests in boreholes

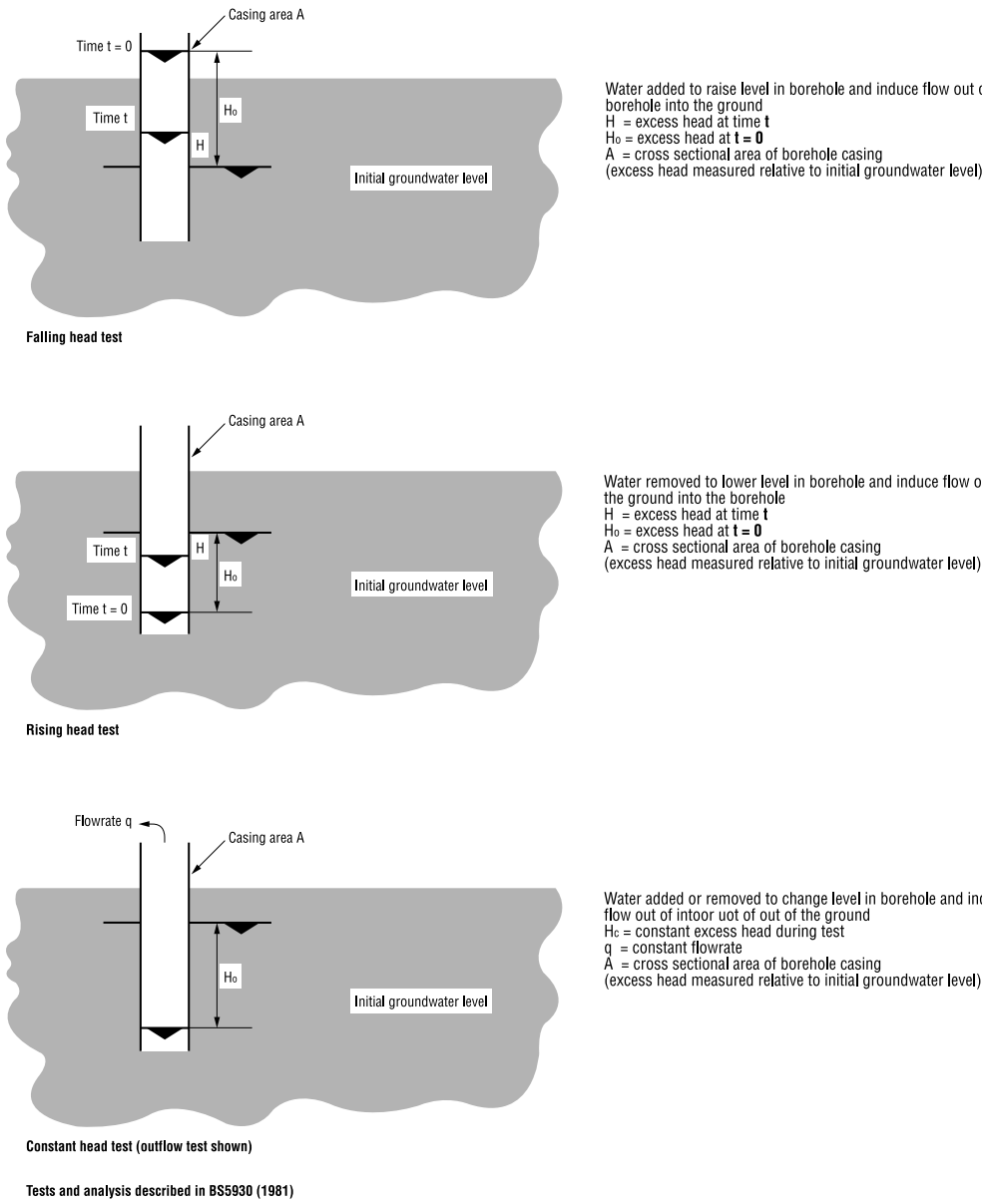

Tests and analysis described in BS5930 (1981)

FIGURE 3.9
Packer test

General arrangement of double packer test in borehole

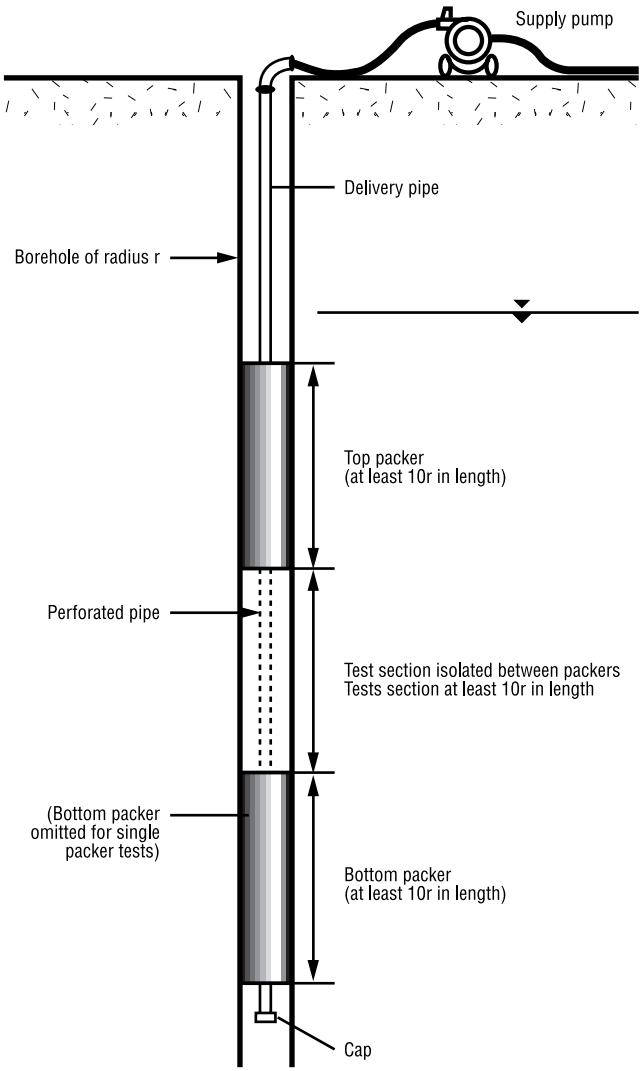

Parameters to be recorded include the injection flowrate Q_1 injection head H_1 borehole radius **r** and length of the test section **L**. **H** is defined as the head of water above initial groundwater level (equal to the head shown on the supply pump pressure gauge, plus the depth from the gauge to the initial groundwater level, minus any head losses in the injection pipework)

The methods for each type of test are described in detail and readily available in geotechnical literature, such as Clayton (1982), Weltman (1983).

It is essential that the permeability of each element of the soil profile is determined so that the potential water loss from the reservoir by groundwater flow beneath the embankment can be modelled for the water head exerted by the storage reservoir. If this is unacceptable ground improvement may be necessary to reduce the effective permeability.

Laboratory Testing

The typical tests necessary to provide parameters for the classification of soils and the design of foundations and earthworks are summarized below. For detailed descriptions of test procedures the reader is referred to National Standards such as ASTM (American) and BS 5930:1981(British). AASHTO (1983).

Classification tests
A restricted number of disturbed samples should be submitted to the following laboratory tests:

- Grain size analysis by wet sieving and hydrometer analysis;
- Liquid and plastic limits (Atterberg limits);

These provide the information to classify the soil so that its typical engineering properties can be determined. For rural development projects simple acceptability criteria are often based on these soil classification tests.

Strength tests
Unconsolidated undrained ('quick') triaxial tests provide the undrained shear strength of the sub-soil under the embankment which enable the safe bearing capacity to be calculated.

Shear strength tests under effective stress conditions measure the drained shear strength (effective cohesion c' and angle of shearing resistance j'). This is necessary for the determination of the stability of the embankment and the reservoir slopes for various water level conditions and for the critical rapid drawdown condition. These tests include the:

- Consolidated drained triaxial compression test;
- Consolidated undrained triaxial compression test (with the measurement of pore pressure);
- Direct shear box test.

Consolidation tests
Oedometer tests are used to measure c_v (coefficient of consolidation, cm^2/s) to determine the rate of settlement and m_v (coefficient of volume decrease cm^2/kN) to determine the magnitude of settlement.

These tests are necessary if clay soils are present to significant depth beneath the embankment. The weight of the embankment will cause the underlying clay soils to settle by consolidation of the soil particles as the inter-particle moisture drains away. The above parameters allow the time and amount of settlement to be calculated. This may be important in to ensure that sufficient freeboard between the crest of the embankment and the maximum water level in the reservoir is maintained and to ensure that drainage levels are maintained.

Permeability tests
Permeability tests using permeability moulds or, preferably, in triaxial cells both with falling head and constant head. Another possibility is to measure the permeability indirectly by calculating the drainage time in the oedometer test. This test applies to clayey and/or silty materials. Laboratory tests measure permeability at sample scale and it should always be remembered that in natural materials variations in permeability will occur at field scale and field tests are to be preferred.

Compaction tests

Proctor compaction tests are carried out on reconstituted material samples to measure the relationship between dry density and moisture content. This provides the information necessary to design the placement method for the embankment fill.

When soil is compacted at a range of moisture contents in the above tests then for the same compactive effort the compacted density will rise with increasing moisture content to an optimum moisture content value. At this value the maximum dry density is achieved. When more moisture is added the density decreases again. It is important to determine the optimum moisture content and maximum dry density for the embankment materials and design a placement programme to compact the soils as closely as possible to the maximum dry density. This produces an embankment which will display the minimum permeability for the soil type and will minimise future settlement of the embankment materials.

Chapter 4

Description and classification of soils and rocks

General

The purpose of a classification system is to group together soils and rocks with similar properties. In engineering terms, materials which classify into the same group will have similar performance characteristics, for example permeability, shear strength, compressibility and workability. Therefore the description and classification of soil and rock materials into these groups allows the engineer to make an initial assessment of the typical engineering behaviour.

For the small dams considered in this manual, the suggested classification system for soils is the USCS (Unified Soil Classification System), a system of general applicability and widely used. The normal components of soils are gravel, sand, silt, clay and organic material, and most soils are a mixture of these components. The USCS system divides soil into three major divisions: coarse-grained soils, fine-grained soils and highly organic or peaty soils.

This classification system, in common with others, depends on several fundamental soil classification tests. These are the moisture content, plasticity characteristics (Atterberg Limits) and particle size distribution. The reader is referred to the appropriate standards for the detailed methods of carrying out these tests in the laboratory, e.g. British Standards Institution (1975), ASTM, etc. In the absence of laboratory tests visual/manual methods are available for initial identification.

Visual methods for the USCS classification of soils

Equipment and general procedure

The following basic items of equipment are needed:

- Rubber syringe or a small oil can having a capacity of approximately 0.5 litres.
- Supply of clean water.
- Small bottle of dilute hydrochloric acid.
- Classification chart (Figure 4.1).

The classification of a soil by this method is based on visual observation and the estimate of its characteristics is done on a disturbed sample. This procedure is in effect a process of elimination, beginning on the left side of the classification chart and working to the right until the proper group symbol is obtained.

The group symbol must be supplemented by a detailed engineering description, which includes the in-situ conditions of the materials. By making an examination in a step-by-step procedure as given below, the soil is first described and then classified.

Final field classification of the soil should be recorded on a form. An example of a completed form is given in Figure 4.2.

FIGURE 4.1
USCS soil classification chart

Field Identification Procedures (Excluding particles larger than 75 μm and basing fractions on estimated weights)				Group Symbols a	Typical Names	Information Required for Describing Soils	Laboratory Classification Criteria
Coarse-grained soils: More than half of material is larger than 75 μm sieve size[b] (The 75 μm sieve size is about the smallest particles visible to naked eye)	Gravels: More than half of coarse fraction is larger than 4 mm sieve size	Clean gravels (little or no fines)	Wide range in grain size and substrantial amounts of all intermediate particle sizes	*GW*	Well graded gravels, gravel-sand mixtures, little or no fines	Give typical name: indicate approximate percentages of sand and gravel; maximum size; angularity, surface condition, and hardness of the coarse grains; local or geologic name and other pertinent descriptive information; and symbols in parentheses	$C_U = \frac{D_{60}}{D_{10}}$ Greater than 4; $C_C = \frac{(D_{30})^2}{D_{10} \times D_{60}}$ Between 1 and 3
			Predominantly one size or a range of sizes with some intermediate sizes missing	*GP*	Poorly graded gravels, gravel-sand mixtures, little or no fines		Not meeting all gradation requirements for *GW*
		Gravels with fines (appreciable amount of fines)	Nonplastic fines (for identification procedures see *ML* below)	*GM*	Silty gravels, poorly graded gravel-sand-silt mixtures	For undisturbed soils add information on stratification, degree of compactness, cementation, moisture conditions and drainage characteristics	Atterberg limits below "A" line, or *PI* less than 4 — Above "A" line with *PI* between 4 and 7 are *borderline* cases requiring use of dual symbols
			Plastic fines (for identification procedures, see *CL* below)	*GC*	Clayey gravels, poorly graded gravel-sand-clay mixtured		Atterberg limits above "A" line, or *PI* greater than 7
	Sands: More than half of coarse fraction is smaller than 4 mm sieve size	Clean sands (little or no fines)	Wide range in grain sizes and substratial amounts of all intermediate particle sizes	*SW*	Weel graded sands, gravelly sands, little or no fines	Example: *Silty sand*, gravelly; about 20% hard, angular gravel particles 12 mm maximum size: rounded and subangular sand grains coarse to fine, about 15% non-plastic fines with low dry strength; well compacted and moist in place; alluvial sand; (*SM*)	$C_U = \frac{D_{60}}{D_{10}}$ Greater than 6; $C_C = \frac{(D_{30})^2}{D_{10} \times D_{60}}$ Between 1 and 3
			Predominantly one size or a range of sizes with some intermediate sizes missing	*SP*	Poorly graded sands, gravelly sands, little or no fines		Not meeting all gradation requirements for *SW*
		Sands with fines (appreciable amount of fines)	Nonplastic fines (for identification procedures see *ML* below)	*SM*	Silty sands, poorly graded sand-silt mixtures		Atterberg limits below "A" line, or *PI* less than 5 — Above "A" line with *PI* between 4 and 7 are *borderline* cases requiring use of dual symbols
			Plastic fines (for identification procedures, see *CL* below)	*SC*	Clayey sands, poorly graded sand-clay mixtures		Atterberg limits below "A" line, or *PI* greater than 7
Fine-grained soils: More than half of material is smaller than 75 μm sieve size (The 75 μm sieve size is about the smallest particles visible to naked eye)	Identification Procedures on Fraction Smaller than 380 μm Sieve Size						
			Dry Strength (crusing characteristics)	Dilatancy (reaction to shaking)	Toughness (consistency near plastic limit)		
	Silts and clays liquid limit less than 50		None to Slight	Quick to slow	None	*SM*	Inorganic silts and very fine sands, rock flour, silty or clayey fine sands with slight plasticity
			Medium to high	None to very slow	Medium	*CL*	Inorganic clays of low to medium plasticity, gravelly clays, sandy clays, silty clays, lean clays
	Silts and clays liquid limit greater than 50		Slight to medium	Slow	Slight	*OL*	Organic silts and organic silt-clays of low plasticity
			Slight to medium	Slow	Slight to medium	*MH*	Inorganic silts, micaceous or diatomaceous fine sandy or silty soils, elastic silts
			High to very high	None	High	*CH*	Inorganic clays of high plasticity, fat clays
			Medium to high	None to very slow	Slight to medium	*OH*	Organic clays of medium to high plasticity
Highly Organic Soils			Readily identified by colour, odour, sporgy feel and frequently by fibrous texture			*Pt*	Peat and other highly organic soils

Use grain size curve in identifying the fractions and given under field identification

Determine percentages of gravel and sand from grain size curve

Depending on percentage of fines (fraction smaller than 75 μm sieve size) coarse grained soils are classified as follows:
Less than 5% *GW, GP, SW, SP*
More than 12% *GM, GC, SM, SC*
5% to 12% Borderline cases requiring use of dual symbols

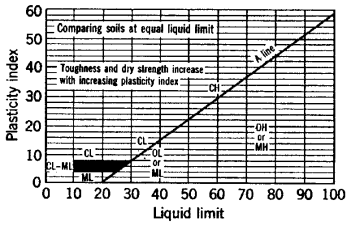

Plasticity chart for laboratory classification of fine grained soils

a *Boundary classifications*. Soils possessing characteristics of two groups are designated by combinations of group symbols. For example *GW-GC*, well graded gravel-sand mixture with clay binder.
b All sieve sizes on this chart are U.S. standard.

These procedures are to be performed on the minus 380μm sieve size particles.
Dilatancy (Reaction to shaling):
After removing particles larger than 380 μm sieve size, pretar a pat of moist soil with a volume of about 8000 mm³. Add enough water if necessary to make the soil soft not sticky.
Place the pat in the open palm of one hand and shake horizontally, striking vigorously against the other hand several times. A positive reaction consists of the appareance of water on the surface of the pat which changes to a livery consistency and becomes glossy. When the sample is squeezed between the fingers, the water and gloss disappear from the surface, the pat stifens and finally it cracks or crumbles. The rapidity of appareance of water during shaking and of its disappearance during squeezing assist in identifyng the character of the fines in a soil.
Very fine clean sands give the quickest and most distinct reaction whereas a plastic clay has no reaction. Inorganic silts, such as a typical rock flour, show a moderately quick reaction.

Field Identification Procedures for Fine Grained Soils or Fractions
For field classification purposes, screening is not intended, simply remove by hand the coarse particles that interfere with the tests.

Dry Strenght (Crushing characteristics):
After removing particles larger than 380μm sieve size, mould a pat of soil to the consistency of putty, adding water if necessary. Allow the pat to dry completely by oven, sun or air drying, and then test its strength by breaking and crumbing between the fingers. This strenght is a measure of the character and quantity of the colloidal fraction contained in the soil. The dry strength increases with increasing plasticity. High dry strenght is characteristic for clay of the CH group. A typical inorganic silt possesses only very slight dry strenght. Silty fine sands and silfts have about the same slight dry strenght, but can be distinguished by the feel when powdering the dried specimen. Fine sand feels gritty whereas a ty pical silt has the smooth feel or flour.

Toughness (Consistency near plastic limit):
After removing particles larger than 380 mm sieve size, a specimen of soil about 12 mm cube in size, is moulded to the consistency of putty. If too dry, water must be added and if sticky, the specimen should be spread out in a thin layer and allowed to lose some moisture by evaporation. Then the specimen is rolled out by hand on a smooth surface or between the palms into a treath about 3 mm in a diameter. The thread is then folded and re-rolled repeatedly. During this manipulation the moisture content is gradually reduced and the specimen stiffens, finally loses its plasticity, and crumbles when the plastic limit is reached.
After the thead crumbles, the pieces should be lumped together and a slight kneading action continued until the lump crumbles.
The tougher the thead near the plastic limit and the stiffer the lump when is finally crumbles, the more potent is the colloidal clay fraction in the soil. Weakness of the tread at the plastic limit and quick loss of coherence of the lump below the plastic limit indicate either inorganic clay of low plasticity, or materials such as kaolin-type clays and organic clays which occur below the A-line.
Highly organic clays have a very weak and spongy feel at the plastc limit.

FIGURE 4.2
Data form for visual classification of soil samples

PROJECT: FEATURE: TABLE No.
SHEET OF

IDENTIFICATION				GRADATION (ESTIMATED)					DESCRIPTION AND SOIL CLASSIFICATION	
16Y SAMPLE NUMBER	HOLE NUMBER	LOCATION OF STATION	DEPTH METERS	MAXIMUM SIZE	GRAVEL (%> No.4)	SAND (% No.4-200)	FINES (%< No.200)	COLOR (WET ESTATE)	1. DESCRIPTIVE CLASSIFICATION 2. PARTICLE SIZE, SHAPE, AND GRADATION (UNIFORMLY, WELL, POORLY GRADED, ETC.) 3. CONSISTENCY, ELASTICITY, ETC. 4. REACTION TO SHAKING TEST, DRY STRENGHT, ETC..	GROUP SYMBOL
1	3	Borrow area A	0.0-0.3	3"	70	30	0	Gray	Well graded GRAVEL; clean, hard, subangular gravel sizes, considerably coarse subrounded sand sizes.	GW
2	3		3.0-6.0	1"	60	10	30	Tan	Clayey GRAVEL; predominantely fine, hard, subrounded gravel sizes, small amount of fine sand, clay portions slightly plastic, moderate reaction to HCl.	GC
3	3		6.0-12.0	6"	60	30	10	Brown	Well graded GRAVEL, fairly clean, hard, angular gravel sizes, considerable sand, clay portions moderately plastic (approximately 15 percent oversize 3" to 6" , estimates made in field), moderate reaction to HCl.	GW-GC
4	5		1.5-3.0	8"	0	95	5	Tan	Poorly graded SAND, hard, subangular, no medium sizes sand sizes, very few fines (approximately 10 percent oversize 3" to 8", estimates made in field) moderate reaction to HCl.	SP
5	5		3.0-10.0	4"	5	70	25	Brown	Silty SAND; predominantely coarse, subangular sand sizes, contains a few angular gravel particles and considerable non plastic fines.	SM
6	5		10.0-15.0	# 30	0	50	50	Tan	Silty SAND; fine to medium, poorly graded, hard, micaceous slightly plastic fines.	SM-ML
7	9		0.0-2.0	# 50	0	15	85	Brown	Inorganic SILT; slight plasticity, contains some fine sand no dry strenght.	ML
8	10	Borrow area B	0.0-8.0	# 100	0	5	95	Gray	Inorganic CLAY; high plasticity, high dry strenght, contains a trace of fine sand.	CH

Many natural soils have properties which are not clearly associated with only one soil group, but are common to two or more groups. Alternatively, they may be near the borderline between two groups, either in percentages of the various sizes or in plasticity characteristics. In this case an appropriate dual classification symbol is assigned. A dual symbol consists of the symbols of the two adjacent groups connected by a hyphen, e.g., GW-GC, SC-CL, ML-CL.

Selection and preparation of the sample

Select a representative sample of the soil and spread it on a flat surface or in the palm of the hand, depending on the size of the sample: for a coarse-grained gravel collect a minimum of 2 to 3 kg of material; for sandy or finer soil take at least 500g.

First estimate and record the maximum particle size in the sample, and remove all particles larger than 75 mm from the sample, recording the percentage by dry mass of cobbles (particles 75 to 300 mm in diameter) and boulders (particles over 300 mm in diameter).

Then classify the remaining soil as coarse-grained or fine-grained on the basis of estimating whether 50% of the samples by dry mass can be seen with the naked eye. Soils containing more than 50% individually visible particles are coarse-grained soils. For classification purposes, the No. 200 sieve (0.075 mm) is taken as the particle size division between fine and coarse grains.

Coarse grained-soils

If the soil is considered coarse grained, then the soil is further classified by estimating and recording the percentage of:

- gravel-sized particles: size range 75 mm to 4.75 mm (No. 4 test sieve)
- sand-sized particles: size range 4.75 mm to 0.075 mm(No. 200 test sieve)
- silt and clay-sized particles (fines): size range < 0.075 mm

If the percentage of gravel larger than 4.75 mm (No. 4 test sieve) is greater than the sand, the soil is classified as a gravel, designated by the capital letter G. Gravels are next identified as being clean (containing little or no fines) or dirty.

If the gravel is clean the final classification is made on the basis of its grading. It is classified into:

- **GW** well graded, if there is good representation of all particle sizes
- **GP** poorly graded, if there is either predominant excess or absence of particular particle sizes

Dirty gravels are finally classified on the properties of the fines that make the gravel ‘dirty’. They are classified into:

- **GM** if the fines have little or no plasticity (silty)
- **GC** if the fines are plastic (clayey)

The differentiation between silty or clayey soils is made on the basis of three manual tests which are described in the section on fine-grained soils.

If the percentage of sand is greater than that of gravel, the soil is a sand, designated by the capital letter S. The procedure for sub-division is then the same as for gravel, except that the symbol S replaces G.

If the sand is clean (containing < 5% fines) it is classified as:

- **SW** well graded, if there is good representation of all particle sizes;
- **SP** poorly graded, if there is either predominant excess or absence of particular particle sizes

If the sand contains fines it is classified as:

- **SM** if the fines have little or no plasticity (silty)
- **SC** if the fines are plastic (clayey)

Borderline classifications for coarse-grained soils can occur. For example, borderline classifications within the separate gravel or sand groups such as GW-GP, GW-GM, SW-SP, SM-SC and SW-SM are common, and borderline classifications between the gravel and sand groups such as GW-SW, GP-SP, GM-SM and GC-SC are also common.

Fine-grained soils

If the soil is predominantly (more than 50%) fine-grained, the percentages of gravel and sand are estimated and it is then classified into one of six soil groups on the basis of three tests. These are dilatancy (reaction to shaking), dry strength (resistance to crushing) and toughness (consistency near the plastic limit).

The tests for identifying fine-grained soils are performed on that fraction of the soil finer than 0.425 mm (the No. 40 test sieve). Select a small, representative sample, remove by hand all particles larger than 0.425 mm and prepare two small sub-samples, of about 10cm^3 each, by moistening until the specimen can easily be rolled into a ball. Perform the tests listed below; carefully noting the behaviour during each test.

Dilatancy (reaction to shaking): Add enough water to nearly saturate one of the soil pats. Place the pat in the open palm of one hand and shake horizontally, striking vigorously against the other hand several times. Squeeze the pat between the fingers. The appearance and disappearance of the water with shaking and squeezing is referred to as a “reaction”. This reaction is called:

- Quick if water appears and disappears rapidly;
- Slow if water appears and disappears slowly;
- No reaction if the water condition does not change.

Dry strength (crushing resistance): Completely dry one sample, then assess its resistance to crumbling and powdering in between the fingers. This resistance is called dry strength and is influenced largely by the colloidal fraction it contains.

- slight dry strength is if the dried pat can be easily powdered
- medium dry strength if considerable finger pressure is required
- high dry strength if it cannot be powdered at all

Toughness refers to the consistency near the plastic limit. Dry the pat used for the dilatancy test by working and moulding until it has the consistency of putty. The time required to dry the pat is also an indication of its plasticity.

Roll the pat on a smooth surface or between the palms of the hand into a thread about 3 mm in diameter. Fold and re-roll the thread repeatedly to 3 mm diameter so that its water content is gradually reduced until the 3 mm thread just crumbles. The water content at crumbling stage is called the plastic limit, and the resistance to moulding at the plastic limit is called the toughness. After the thread crumble stage, the pieces should be lumped together and a slight kneading action continued until the lump crumbles. The toughness is classified as:

- high toughness — If the lump can still be moulded slightly drier than the plastic limit and if high pressure is required to roll the thread between the palms of the hands
- medium toughness — if the lump formed from threads slightly below the plastic limit crumbles.
- slight toughness — if the soil cannot be lumped together when drier than the plastic limit and a weak thread breaks easily

Other useful identification tests are:

Organic content and colour: Fresh, wet, organic soils usually have a distinctive odour of decomposed organic matter. This odour can be made more noticeable by heating the wet sample. Another indication of organic material is a distinctive dark colour. Dry, inorganic clay develops an earthy odour when moistened which is distinct from that of decomposed organic matter.

The acid test: Dilute hydrochloric acid (HCl) is primarily a test for the presence of calcium carbonate. For soils with high dry strength, a strong reaction indicates that the strength may be due to calcium carbonate acting as cementing agent, rather than colloidal clay. The acid used is a 25% solution, i.e. one part of concentrated HCl to three parts of distilled water.

Shine is a quick supplementary procedure for determining the presence of clay. The test is done by cutting a lump of dry or slightly moist soil with a knife. A shiny surface indicates high plasticity while a dull surface indicates silt or clay of low plasticity.

Sedimentation: Place about 50 g (more for gravely soils) in a glass jar, such as a beaker, test tube, glass graduated container or other jar at least 150 mm deep, and add water to fill the jar. Shake vigorously for several minutes and allow to stand still.

- Gravel and coarse sand will settle almost instantly.
- Medium to very fine sand will take not more than 1 to 3 minutes to settle.
- Silt takes not more than 15 minutes.
- Clay will stay in suspension for a long time.

The end result is that the coarser particles settle at the bottom and progressively finer particles settle in layers. The relative proportion of each grain size can be estimated from the relative thickness of the layers.

Fine grained soils are classified on the following basis:

The following three groups are soils having a slight to medium plasticity (symbol L):

- **ML** has little or no plasticity and may be recognised by, quick dilatancy, slight dry strength and slight toughness.
- **CL** has slight to medium plasticity and may be recognised by very low dilatancy, medium to high dry strength, and medium toughness.
- **OL** is less plastic than the clay (CL) and may be recognised by medium to slow dilatancy, slight to medium dry strength, and slight toughness. For a soil to be grouped here, organic matter must be present in sufficient quantity to influence the soil properties.

The following three groups are soils having a slight to high plasticity (symbol H):

- **MH** is generally very absorptive. It has slight to medium plasticity and may be recognised by slow dilatancy, low dry strength and slight to medium toughness.
- **CH** possesses high plasticity and may be recognised by no dilatancy, high dry strength and usually high toughness.
- **OH** is less plastic than the CH clay and may be recognised by slow dilatancy, medium to high dry strength and slight to medium toughness. Organic matter must be present in sufficient amount to influence soil properties in order for a soil to be placed in this group.

Borderline classifications can occur within the fine-grained soils, between soils having low and high liquid limits and between silty and clayey soils. Common borderline classifications are ML-MH, CL-CH, OL-OH, CL-ML, ML-OL, CL-OL, MH, CH, MH-OH, and CH-OH.

Description of soils

Probably the most important factor in a ground investigation is a good soil description and classification. Samples should be described in a routine way and the description should contain elements in a fixed position within the overall description. The elements, and their order, are set out below:

- Consistency (for fine grained soils) or relative density (for coarse grained soils)
- Fabric and fissuring
- Colour
- Subsidiary constituents
- Angularity or grading of the principle soil component
- Principle soil type in capital letters
- Other detailed comments as necessary
- Soil classification symbols in brackets

Some typical examples are given below:

- Very stiff fissured dark grey silty CLAY (CL)
- Loose brown fine to coarse angular flint GRAVEL (GW)

Subsidiary components

If the soil contains a variety of different sized materials systems have been developed to imply the proportions on the basis of the term used. BS 5930:1981 uses the following system:

TABLE 4.1
Typical values of mixed sized soils

Descriptive Term	Subsidiary component by weight (%)		
	Sand and Gravel mixes	Coarse soil containing fines	Fine soil containing coarse particles
None	0	0	< 35
Slightly	< 5	< 5	Not used
Subsidiary adjective	5 - 20	5 - 15	35 - 65
Very	> 20	15 - 35	Not used

Some typical examples are given below:

- Loose brown sandy fine to coarse GRAVEL (implies 5 - 20% sand)
- Loose brown very clayey slightly gravelly fine to coarse SAND (implies 15 -35% clay, <5% gravel)
- Stiff grey sandy CLAY (implies 35% to 65% sand)

Consistency or Relative Density

The strength of fine grained soils can be determined by a simple field test involving the remoulding of a lump of soil in the hand. On the basis of the ease of remoulding, the strength is assessed on the basis of the table below:

TABLE 4.2
Consistency of fine grained soils

Soil consistency	Undrained Shear Strength c_u (kg/cm^2)	Manual estimation
Very soft	< 0.20	Extrudes between fingers when saturated
Soft	0.20 - 0.40	Moulded by light finger pressure
Firm	0.40 - 0.75	Moulded by strong finger pressure
Stiff	0.75 - 1.5	Can be indented by thumb
Very stiff	1.5 - 3.0	Can be indented by thumbnail
Hard	> 3.0	

Angularity

Coarse granular materials such as gravels, cobbles and boulders are sufficiently large that their angularity can be described. The angularity terms from BS882 are given in Figure 4.3.

GEOTECHNICAL PROPERTIES OF SOIL GROUPS

Engineers and geologists are often expected to give predictions of soil behaviour even when little or no test results are available. This is particularly true at the stage of preliminary designs or for

small projects. This section discusses typical values of engineering properties for various classes of soils, together with correlations between the different properties. Particular emphasis is given to correlations with the USCS classification discussed above. Of course if laboratory testing facilities are available or become available at a later stage of the project, the properties should be verified.

FIGURE 4.3
Terms in the soil description for angularity of coarse particles

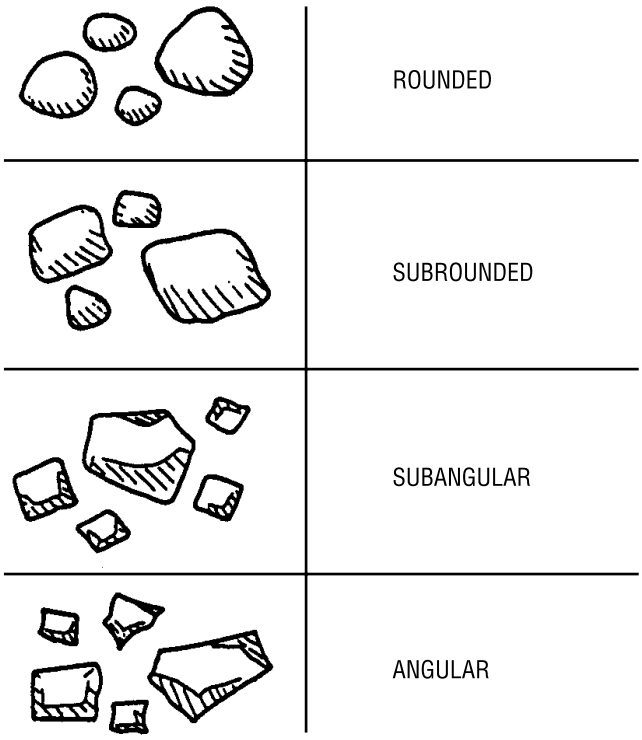

Compacted soil properties

The table presented in Figure 4.4 is a summary of the values obtained from over 1500 tests carried out at the US Bureau of Reclamation laboratory at Denver, Colorado. These are arranged according to the principal USCS soil groups. For each soil property the number of tests, the maximum, minimum, average values and standard deviation are presented.

Permeability

The voids in the soil mass provide passages for water to move. Such passages are interconnected and variable in size. The water movement is called **percolation** and the measure of it is called permeability. The factor measuring permeability is called the coefficient of permeability, K, which represents the discharge through a unit area under a unit hydraulic gradient, i.e. a velocity. There are many units of measurement in common use for expressing K and it is common to use cm/s, m/s or km/day. The coefficient of permeability of natural soil deposits ranges from 10^2 to 10^{-9} cm/s. Permeability in some soils is very sensitive to changes in density, gradation and presence of fines. Because of the wide variation in permeability values, a numerical value for K should always be considered as indicative of an order of magnitude rather than an absolute value.

It is customary to describe soils with permeabilities $<1 \times 10^{-6}$ cm/s as impervious; those with permeabilities between 1×10^{-6} cm/s and 1×10^{-4} cm/s as semi-pervious and soils with permeability $> 1 \times 10^{-4}$ cm/s as pervious. Figure 4.5 gives typical values of permeability.

Compressibility

The compressibility of soils in response to loading can be broadly divided into two types: elastic settlement and time-dependent settlement:

FIGURE 4.4
Typical properties of compacted soils

Group Symbol	Soil type	Range of maximum dry unit weiglfl (Stand Proctor) KN/m^3	Range of optimum moisture (Stand. Proctor) %	Typical value of settlement complete lateral confinement (Stand. Proctor)		Typical strenght characteristics			Typical coefficient of permeability (Stand. Proctor) cm/sec	Range of CBR values (Mod. Proctor)	Range of subgrade modulus K (Mod Proctor) KN/m^3
				At 0067 KPa	At 0.172 KPa	c' Eff. cohesion (as compacted) (Stand. Proctor) KPa	c' Eff. cohesion (saturated) (Stand. Proctor) KPa	Φ' (Effective stress envelope) (Stand. Proctor) Degrees			
				Percent of original height							
GW	Well graded clean gravels, gravel-sand mixtures	20.0- 21.6	11 - 8	0,3	0,6	0,0	0,0	>38	2,5E-02	40 - 80	83040 - 138400
GP	Poorly graded clean gravels, gravel-sand mix	18.4-20.0	14 - 11	0,4	0,9	0,0	0,0	>37	5,0E-02	30 - 60	69200 - 110720
GM	Silty-gravels poorly graded gravel-sand-silt	19.2-21.8	12 - 8	0,5	1,1	insufficient data	insufficient data	>34	5,0E-07	20 - 60	27680 - 110720
GC	Clayey gravels poorly graded gravel-sand-clay	18.4-20.8	14 - 9	0,7	1,6	insufficient data	insufficient data	>31	> 5.0E-08	20 - 40	27680 - 83040
SW	Well graded clean sands gravelly sands	17.6-20.8	16 - 9	0,6	1,2	0,0	0,0	38	> 5.0E-04	20 - 40	55360 - 83040
SP	Poorly graded clean sands sand-gravel mix	16.0- 19.2	21 - 12	0,8	1,4	0,0	0,0	37	> 5.0E-04	10 - 40	55360 - 83040
SM	Slity sands, poorly graded sand-silt mix	17.6-20.0	16 - 11	0,8	16	50,3	20,1	34	> 2.5E-05	10 - 40	27680 - 83040
SM-SC	Sand-silt-clay mix with slightly plastlc fines	17.6-20.6	15 - 11	0,8	1,4	50,3	14,4	33	> 1.0E-06	5 - 30	27680 - 83040
SC	Clayey sands poorly graded sand-clay mix	16.8-20.0	19 - 11	1,1	2,2	74,2	11,0	31	> 2.5E-07	5 - 20	27680 - 83040
ML	Inorganic silts and clayey silts	15.2-19.2	24 - 12	0,9	1,7	67,0	9,1	32	> 5.0E-06	l5 or less	27680 - 55360
ML-CL	Mixture of inorganic silt and clay	16.0- 19.2	22 - 12	1,0	2,2	64,6	21,2	32	> 2.5E-07	insufficient data	ineufficient data
CL	Inorganic clays of low to medium plasticity	15.2- 19.2	24 - 12	1,3	2,5	86,2	12,9	28	> 5.0E-08	l5 or less	13840 - 55360
OL	Organic silts and silt-clays, low plasticity	12.8 - 16.0	33 - 21	insufficient data	insufficient data	insufficient data	insufficient data	insufficient data	insufficient data	5 or less	13840 - 27680
MH	Inorganic clayey silts-elastic silts	11.2- 15.2	40 - 24	2,0	3,8	71,8	20,1	25	> 2.5E-07	10 or less	13840 - 27680
CH	Inorganic clays of high plasicity	12.0 - 16.6	36 - 19	2,6	3,9	102,9	11,0	19	> 5.0E-08	15 or less	13840 - 41520
OH	Organic clays and sllty clays	10.4 - 16.0	45 - 21	insufficient data	insufficient data	insufficient data	insufficient data	insufficient data	insufficient data	5 or less	6920 - 27680

FIGURE 4.5
Typical soil permeabilities for the principal soil groups

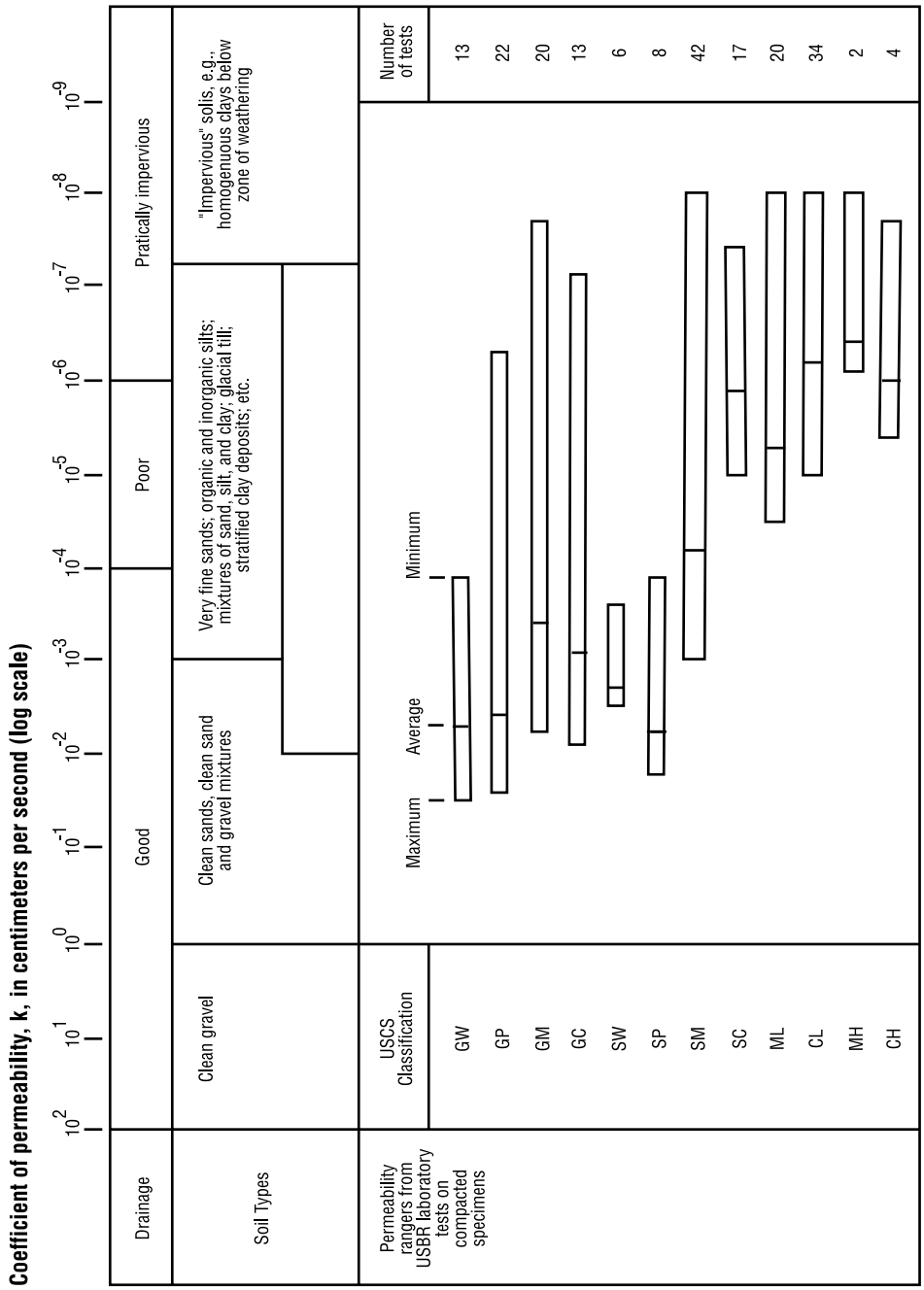

- elastic compressibility is simple to deal with: the induced settlement is instantaneous, recoverable and can be calculated from linear elastic theory
- time-dependent compressibility occurs in both granular and cohesive soils (although the response time for granular soils is usually short). Their response to loading is non-linear, and the settlement is only partially recoverable

Two types of time-dependent settlements are recognised:

- *primary consolidation* which results from water being squeezed out of soil voids under the influence of the excess pore water pressure, generated by the applied load
- *secondary compression* occurs essentially after all the pore water has been released, after primary consolidation is substantially completed, and involves the deformation of the soil particles themselves. Secondary compression is generally only important in organic soils.

The compressibility of clay is usually measured by means of oedometer tests. Results may be expressed in a number of ways, leading sometimes to a confusing variety of compressibility parameters.

Although the coefficient of *volume compressibility mv* is usually quoted, its variability with the confining pressure makes it less useful for quoting typical compressibilities or for correlating it with other geotechnical properties. For this reason, the *compression index* is usually preferred. Typical values of Compression Index C_c are given in the following Table 4.3.

TABLE 4.3
Typical values of compressibility index, C_C

Soil		C_C from	C_C to
Normally consolidated medium sensitive clays		0.2	0.5
CL	Chicago silty clay	0.15	0.3
CL	Boston blue clay	0.3	0.5
CH	Vicksburg Buckshot clay	0.5	0.6
CL-CH	Swedish medium sensitive clays	1	3
CL-CH	Canadian Leda clays	1	4
MH	Mexico City clay	7	10
OH	Organic clays	> 4	
Pt	Peats	10	15
ML-MH	Organic silt and clayey silt	1.5	4
CL	San Francisco Bay Mud	0.4	1.2
CH	San Francisco Old Bay clays	0.7	0.9
CH	Bangkok clay	0.4	

after Holtz and Kovacs, 1981

Dispersivity

Dispersive soils are the main cause of piping failure and collapse of earthfill dams, especially where fundamental components such as suitable filters are lacking or when proper supervision during construction was not adequate.

By nature of their mineralogy and the chemistry of the water in the soil, dispersive soils are susceptible to separation of the individual clay particles and subsequent erosion by seepage flows of the very small particles through fine fissures or cracks in the soil. This is distinct from erodible soils, such as silt and sand, which erode by physical action of water flowing through or over the soil.

It has been recognized that the presence of dispersive soils either in the earth material used to construct a dam, or in the dam foundation, greatly increases the risk of failure due to piping. Many tests are used for the determination of the dispersivity of a soil.

The *crumb test* is a quick test which consists of placing a small soil aggregate in a large volume of distilled water and checking whether a colloidal cloud is forming. The presence of such a cloud is evidence that the soil is dispersive. In detail the test consists of dropping a small clod under natural moisture about 6 to 9 mm in diameter into a clear beaker about 150 ml of distilled water or 0.001 normal sodium hydroxide, or both. If the soil is dispersive, a colloidal cloud develops around the periphery of the clod after 5 to 10 minutes.

A rating system of 1 to 4 is used:

- **Grade 1** No reaction. The crumb may slake and run out on bottom of the beaker in flat pile, but no sign of cloudy water caused by colloids in suspension.
- **Grade 2** Slight Reaction. Bare hint of cloud in water at the surface of crumb.
- **Grade 3** Moderate reaction. Easily recognisable cloud of colloids in suspension; usually spreading out in thin streaks on bottom of beaker.
- **Grade 4** Strong reaction. Colloidal cloud covers nearly the whole bottom of the beaker, usually in a very thin skin. In extreme cases all the water in the beaker becomes cloudy.

The *Pinhole test* allows water to flow at varying heads through a pinhole of 1 mm diameter through a clay specimen. The rate and nature of discharge is observed to estimate dispersivity. The water becomes coloured and the hole rapidly erodes for dispersive clay. For non-dispersive clay, the water is clear and there is no erosion.

Description of rocks

In the same way that a soil should be described in a routine way the same procedure should be followed for a rock. It is recommended that each element in a rock sample should be described in the following sequence:

- Weathering classification
- Colour
- Grain size texture
- Strength
- Rock name
- Other characteristics

Examples of rock descriptions are given below:
Light grey-brown medium grained slightly weathered strong SANDSTONE, widely bedded
Grey coarse grained crystalline moderately strong GRANITE, very widely jointed

Rock name

The rock name is probably the most difficult part of the description for a non-specialist. The table in Figure 4.6 provides a guide to the identification of the common rocks.

FIGURE 4.6
Guide to identification of common rocks

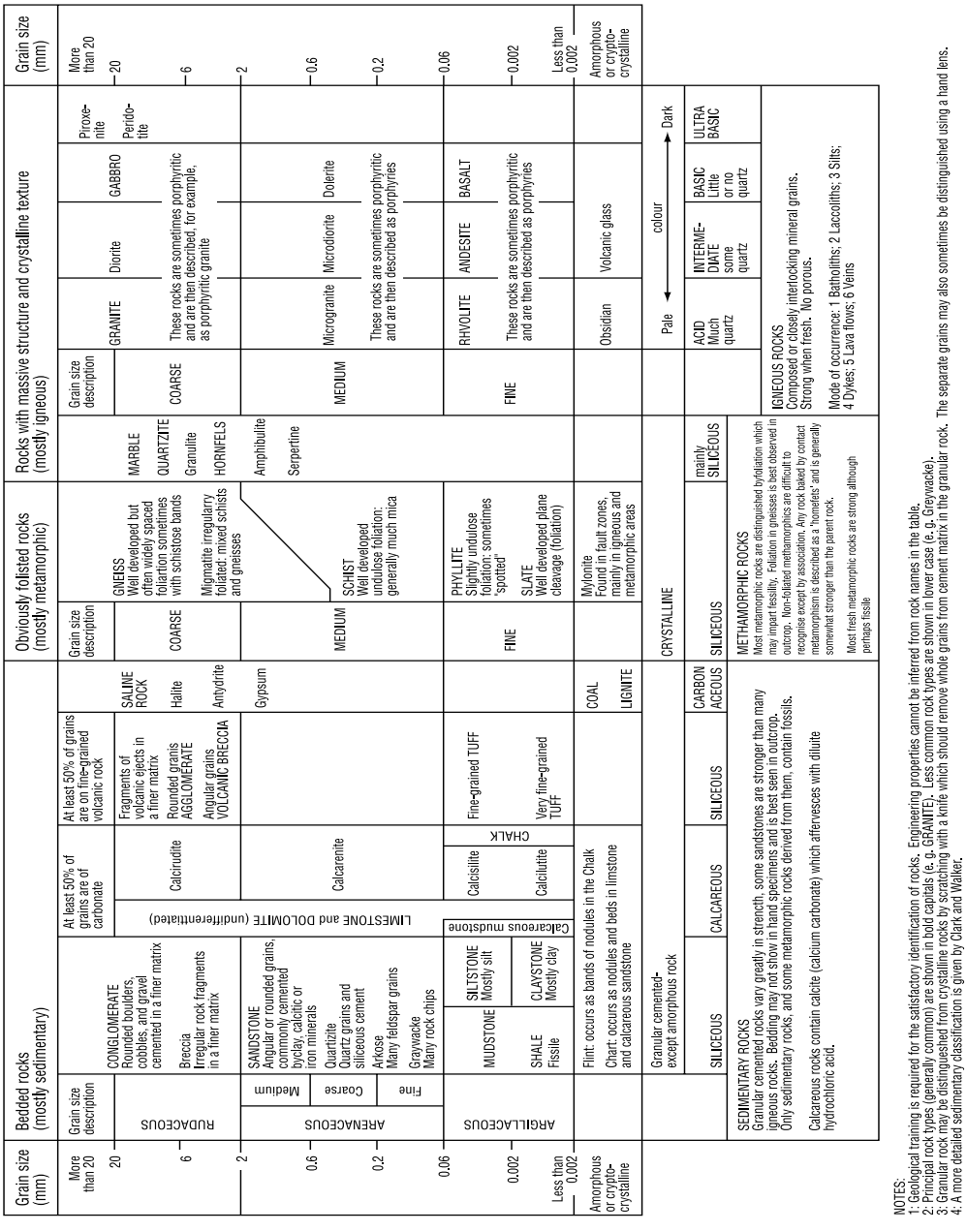

Rock texture and fabric

The *texture* of a rock is the general physical character arising from the interrelationship of its constituent mineral particles. This depends on their shape, degree of crystallinity and packing.

The texture of igneous rocks depends on the rate at which the magma cools. Granites and gabbros are coarsely crystalline because they are emplaced below the earth's surface and cool relatively slowly. Basalts are finely crystalline because they are ejected onto the earth's surface and cool quickly. The coarser grained varieties, such as gabbros, weather more quickly than the finer grained varieties, such as basalts, because they possess a higher porosity.

Sedimentary rocks have a texture that depends on the mode and distance of sediment transport and the conditions under which they were deposited and subsequently buried. Such rocks may be loosely compacted and voided, densely compacted with a range of grain sizes or cemented with a secondary constituent.

Metamorphic rocks possess a texture that depends on the character of the original rock and the particular conditions of temperature and pressure under which it has been modified. For example, rocks that have been modified under high temperatures and pressures during mountain building episodes are often coarsely crystalline, such as gneisses.

Weathering classification

Weathering is defined as 'that alteration which occurs in rocks due to the influence of the atmosphere and hydrosphere (Legget, 1962). It is progressive, and originates from the surface, penetrating intact materials by virtue of their porosity and rock masses by virtue of discontinuities.

On a local scale the pattern is of considerable complexity. In addition to mechanical and chemical weathering processes humus may be incorporated and insoluble materials may be leached downward. However, the result is a succession of fairly distinct horizons generally parallel to the land surface, and this pattern forms the basis of weathering classification schemes developed for application in the engineering field (Figure 4.7). Such schemes are applied on the basis of visual description but the weathering grades represent differences in properties such as strength, porosity, etc.

Initially the surface zone decomposes, together with those zones adjacent to joints and fissures. As weathering continues the fresh strong rock changes to weak rock and eventually to a residual soil. Between the parent rock and the soil are transitional layers of increasingly weathered material of decreasing strength.

FIGURE 4.7
Rock Weathering Classification

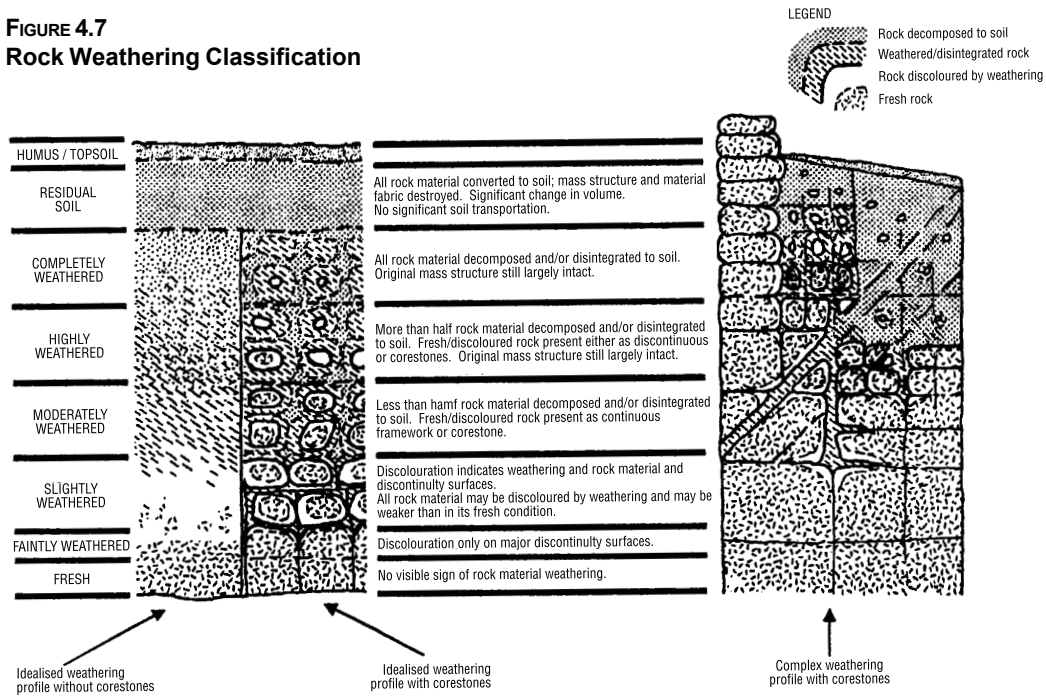

Strength

The descriptions of rock strength have been standardised in BS5930:1981,according to the following table below. The strength can also be estimated in the field by using the criteria developed by the Geological Society of London 1977 is given in Table 4.4:

TABLE 4.4
Rock strength estimates

BS5930:1981		VISUAL/MANUAL CRITERIA
Term	**UCS MPa**	**GSL(1977) scheme**
Very weak	< 1.25	May be broken in the hand with difficulty
Weak	1.25 to 5	Material crumbles under firm blows with the sharp end of a geological pick
Moderately weak	5 to 12.5	Too hard to cut by hand into a triaxial specimen
Moderately strong	12.5 to 50	5 mm indentations with sharp end of pick
Strong	50 to 100	Hand held specimen can be broken with single blow of geological hammer
Very strong	>100	More than one blow of geological hammer required to break specimen

Discontinuity classification

The spacing of discontinuities, either bedding or joints can be described in accordance with the table 4.5 below.

TABLE 4.5
Spacing of discontinuities

TERM		SPACING
Joints	**Beddings**	
Very widely spaced	Very thickly bedded	> 2 m
Widely spaced	Thickly bedded	600 mm - 2 m
Medium spaced	Medium bedded	200 mm - 600 mm
Closely spaced	Thinly bedded	60 mm - 200 mm
Very closely spaced	Very thinly bedded	20 mm - 60 mm
Extremely closely spaced	Thickly laminated	6 mm - 20 mm
	Thinly laminated	< 6 mm

Chapter 5

Design of gabion spillways

The spillway is an important component of any hydraulic structure and its cost often represents more than half the total cost. The main function of the spillway crest is to fix the maximum water level upstream of the dam and prevent overtopping over the main structure. The spillway must be dimensioned according to the calculated design flow (Chapter 2).

The procedures used for designing the structures that compose a spillway (e.g. spillway channel, weir, stilling basin) are based on hydraulics and stability computation procedures.

Mitigating changes in hydraulic energy

In natural streams, the total hydraulic energy is uniformly dissipated along the streambed. However, if a small dam or weir is built, the energy dissipation on the upstream side of the dam is substantially reduced and the potential energy level is therefore correspondingly increases resulting in a water level rise. When this higher hydraulic energy is dissipated below the structure, it can cause serious scouring in the streambed, thus threatening the stability of the entire structure unless the energy is dissipated immediately beyond the structure. This can happen naturally if the characteristics of the streambed permit, but it may be necessary to create a stilling basin prior to the construction of the dam.in order to mitigate the effect of this increase in hydraulic energy.

The energy dissipation that takes place as a result of the construction of a hydraulic structure can give rise to important erosion phenomena in the streambed. Locally, this will threaten the structure stability. Downstream, it will scour the river bed for a long reach. Therefore, avoiding the negative consequences of energy dissipation is one of the principal problems to be dealt with when designing a hydraulic work.

A common way to solve this problem consists in concentrating the energy in a circumscribed area, called ‘stilling basin’. For the importance of its function, this area should be carefully designed and realised.

Types of spillway

The classification of spillways used in small hydraulic works is based on the position of the spillway in relation to the earth embankment and the position of the main channel in the valley. There are three possible types (see Figure 5.1):

- in the center of the earth embankment, along the axis of the main stream;
- in the earth embankment, but away from the axis of the main stream;
- external to the earth embankment, away from the axis of the main stream, and discharging into a side valley.

A spillway in the center or away from the axis of the structure is usually constructed with gabions. The spillway is made of a simple gabion weir with a stilling basin downstream. The whole gabion structure is generally inserted into the earthfill embankment. A spillway located away from the hydraulic structure is the most appropriate for small earth dams, because its cost is generally much lower than that of other types. Another advantage of this type is the independence of the earth embankment and the spillway, which can therefore be built at different times; otherwise, it is necessary to build these two structures simultaneously, with possible problems of works co-ordination. More important, this solution keeps water away from the earth embankment, avoiding potential erosion problems in the area of contact between the earth and the gabions.

FIGURE 5.1
Types of spillway

THE SPILLWAY
This is an essential safety element whose role is to prevent the **overtopping** of the embarkment by floods when the reservoir is full.
The spillway releases surplus water wich can no loger be stored.

All dams must have a spillway.

According to the position in the embarkment, we can distinguish:
- **A central spillway** which is in the middle of the embarkment axis.
- **A side spillway** which is on the side of the valley.

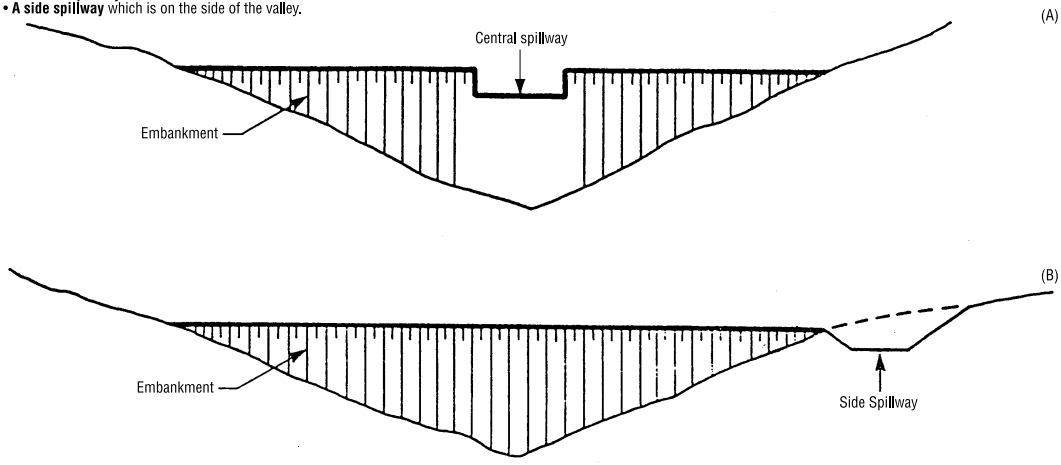

The selection of the type of spillway depends mainly on the following conditions:
- topographical features
- availability on construction materials
- site conditions

A few examples will illustrate this:

(i) if the excavated material from the spillway channel can be used for the earthfill, a side spillway is often the most economical solution as it also serves as a borrow pit.

(ii) if sufficient rip-rap and boulders can be found near the dam site then a central spillway made out of gabions may be the best solution.

(iii) if the bank consists of bare rock then a side spillway is excluded due to the high costs of rock excavation.

(iv) sometimes a tributary or natural depression along one of the banks can serve as a spillway.

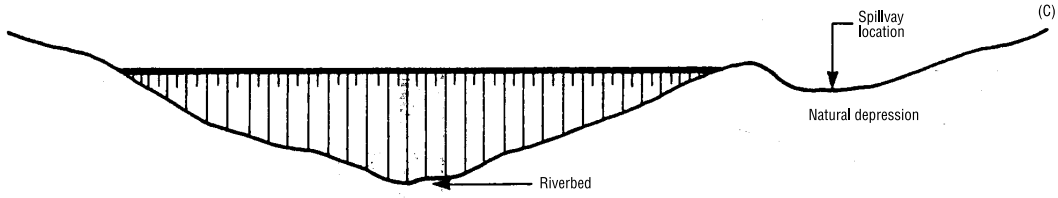

The spillway generally comprises a channel and a drop structure that carries excess water from the reservoir to the point where it rejoins the natural streambed. In the particular case of a central spillway, there is no channel and the excess flow discharges directly to the drop system.

The channel is excavated generally in natural soil, and its characteristics (i.e. cross-section and slope) have to be sufficient to convey the design flow. The drop system generally comprises one or more steps, depending on the energy to be dissipated and the characteristics of the constituent materials of the drop structure.

Discharge channel

The dimensions of the cross-section and the longitudinal slope must be calculated according to the design flow. In order to limit the water velocity it is preferable to select a large channel section with a shallow slope, rather than a narrow channel section with a steep slope. Even if the former solution is more expensive, it usually proves cheaper in the long term, because it requires less maintenance and therefore reduces operational costs.

If the natural soil materials in the channel bed cannot resist the increased hydraulic energy caused by the new structure, the channel has to be lined with more resistant materials. In this case, the channel bank should also be protected with small gabion retaining walls. Since the channel is often constructed perpendicular to the ground slope, gutters or cut-off drains, must be built to prevent channel bank erosion caused by the runoff coming down the slope to the channel (see Figure 5.2).

Figure 5.2
Cross section of spillway channel

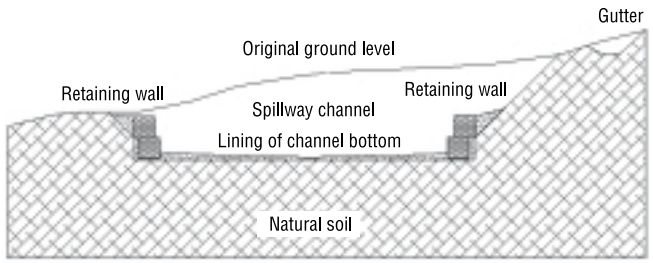

Dimensioning

In an open channel, it is assumed that stream flow lines are parallel and the speed at all points of the cross section are equal to the mean velocity, v. The water energy consists of two components, kinetic and potential. With reference to Figure 5.3, the absolute head in an open channel is expressed by Bernoulli's equation (Bedient, Huber, 1987):

$$H_a = z + d + v^2 / (2 g)$$

where:
H_a: absolute head
z: channel bottom level,
d: water depth,
v: mean velocity,
g: gravity acceleration (= 9.81m/s^2)

FIGURE 5.3
Flow in a channel

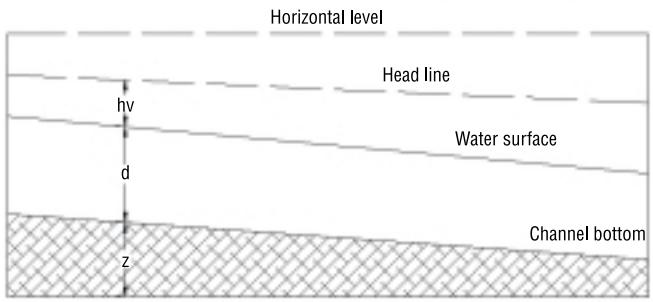

The energy computed at the channel bottom is called 'specific energy' and is expressed by the relation:

$$H_e = d + v^2 / (2 \cdot g)$$

where:
$\mathbf{H_e}$: specific energy

the velocity **v** in an open channel is expressed by:

$$v = Q / S$$

Q: discharge (volume rate of flow),
S: cross sectional area of flow,

Therefore, the specific energy can also be expressed as

$$H_e \text{ (specific energy)} = d + Q^2 / (2 g S^2)$$

Plotting this relationship, i.e. the specific energy (H_e) against the water depth (d) (see Figure 5.4), for different discharge (Q) values, the diagram shows that, for fixed discharge values Q_f and specific energy H_f, there are two possible depths d_1 and d_2, corresponding to sub-critical and super-critical flow conditions respectively.

FIGURE 5.4
Depth-energy relationship for flow in a channel

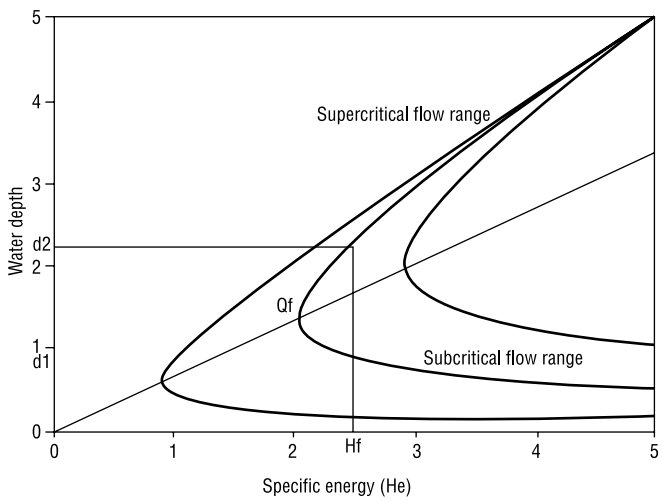

$$H_f = d_1 + v_1^2 / (2 g) = d_2 + v_2^2 / (2 g)$$

where:
$\mathbf{d_1 < d_2}$ and $\mathbf{v_1^2 > v_2^2}$

In the super-critical flow range, the water velocity is always higher than in the sub-critical flow range. There is also a minimum specific energy (H_m), to which corresponds a unique value of water depth (d_m). When this condition occurs, the flow and the other hydraulic characteristics - depth, velocity and slope - are called *critical*. The key parameter used to express the discharge flow condition is the Froude number:

$$F_r = v / (g y_m)^{0.5}$$

where:
$\mathbf{y_m}$ is the average flow depth.
If $\mathbf{F_r} > 1$, then the discharge flow is in supercritical conditions
If $\mathbf{F_r} < 1$, then the discharge flow is in subcritical conditions.

It is important to establish whether the flow falls within the super-critical or the sub-critical ranges. In small hydraulic works, all the structures should be designed, if possible, to keep the flow in the sub-critical range, because the slower flow in the sub-critical range reduces water erosion.

Figure 5.5 shows the energy line corresponding to a discharge from the reservoir to the spillway channel. There is a transitional zone at the channel entrance which corresponds to a loss of specific energy due to entrance friction. Simultaneously, as the water starts flowing into the channel, the energy is transformed from potential to kinetic: in the impoundment, there is negligible flow velocity and therefore the kinetic component of specific energy is negligible so that the specific energy line corresponds to the water level. After the transitional zone, the discharge flows under uniform conditions, with the water level is parallel to the channel bottom. Close to the drop, at the end of the channel, the flow velocity rises and the water level decreases until it reaches the critical condition on the drop.

FIGURE 5.5
Schematic representation of a spillway channel

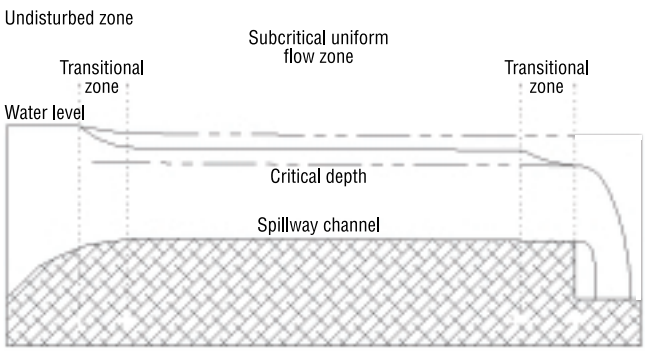

The design of a spillway channel should aim to minimise specific energy losses in order to limit the water velocity and thus to prevent scour problems. Otherwise, the channel bed may have to be lined with a layer of rubble and stones in order to reduce water erosion. If the natural soil is resistant, channel lining may not be necessary. In order to minimize energy losses, the entrance should have a smooth and funneled shape. Assuming uniform flow conditions after this short transitional zone, the flow-depth relationship can be used for calculating the water depth corresponding to the design flow. For this computation, the slope and the roughness of the channel bed depend on the materials lining the channel. The relationship used most frequently for flow computations in open channels is Manning's formula:

$$v = 1/n\ R^{2/3}\ i^{1/2}$$

and

$$K = 1 / n$$

where:

n = 1/K	Manning's coefficient
K	Gaukler-Strikler roughness coefficient
R	hydraulic radius
i	spillway channel longitudinal slope

Manning's formula is solved by an iterative trial and error process: different water levels are assumed in order to compute the flow velocity and discharge, until the computed discharge Q is equal to the design flow, using the relation:

$$Q = v\ S$$

The values of Manning's coefficient (n) are tabulated relative to the channel bottom and bank materials (see Table 5.1).

TABLE 5.1
Roughness coefficient of Manning

	MIN.	NORM.	MAX.
Minor streams (top width at flood stage < 30 m)			
a) *Streams on plain*			
1. Clean, straight, full stage, no rifts or deep pools	0.025	0.030	0.033
2. Same as above, but more stones and weeds	0.030	0.035	0.040
3. Clean, winding, some pools, some weeds and stones	0.033	0.043	0.050
4. Same as above, lower stages, more ineffective slopes and sections	0.040	0.048	0.055
5. Sluggish reaches, weedy, deep pools	0.050	0.070	0.080
6. Very weedy reaches, deep pools floodways with heavy stand of timber and underbrush	0.075	0.100	0.150
b) *Mountain streams, no vegetation in channel, banks usually steep, trees and brush along banks submerged at high stages*			
1. Bottom: gravels, cobbles, and few boulders	0.030	0.040	0.050
2. Bottom: cobbles with large boulders	0.040	0.050	0.070
Flood plains			
a) *Pasture, no brush*			
1. Short grass	0.025	0.030	0.035
2. High grass	0.030	0.035	0.050
b) Cultivated areas			
1. No crop	0.020	0.030	0.040
2. Mature row crops	0.025	0.035	0.045
3. Mature field crops	0.030	0.040	0.050
c) Brush			
1. Scattered brush, heavy weeds	0.035	0.050	0.070
2. Light brush and trees, in summer	0.040	0.060	0.080
3. Medium to dense brush, in summer	0.045	0.085	0.160
d) Trees			
1. Dense willows, straight	0.110	0.150	0.200
2. Cleared land with tree stumps, no sprouts	0.030	0.040	0.050
3. Same as above, but with heavy growth of sprouts	0.050	0.060	0.080
4. Heavy stand of timber, a few down trees, little undergrowth, flood stage below branches	0.080	0.100	0.120
5. Same as above, but with flood stage reaching branches	0.100	0.120	0.160
Major streams (top width at flood stage > 30 m). The n value is less than that for minor streams of similar description, because banks offer less effective resistance			
1. Regular section with no boulders or brush	0.025		0.060
2. Irregular and rough section	0.035		0.100

When the value of the water level corresponding to the design flow in the spillway channel has been established, the water levels in the channel entrance must be verified. According to Figure 5.5 , the sum of the absolute head plus energy losses in section II must be inferior to the absolute head in section I, otherwise the discharge rate in the channel will be lower than the design flow:

$$H_I = z_I + h_I$$
$$H_{II} = z_{II} + h_{II} + v_{II}^2 / (2 \bullet g)$$
$$H_I > H_{II} + \Delta H$$

ΔH is negligible if the channel entrance is well designed. If this is not the case, then the channel characteristics should be modified (i.e. increase the width or decrease the slope, or modify the channel lining in order to decrease the roughness).

When the absolute heads expressed in the above relationships are compatible, the channel bed resistance to scour must be determined. The maximum flow velocity values that can be attained before erosion is initiated are tabulated in Table 5.2 for a number of river bed materials (Fortier and Scobey, 1926; Lane, 1955).

TABLE 5.2
Maximum permissible velocities for different materials

Material	Clear water V (m/sec)	Water transporting colloidal silts V (m/sec)
Fine sand, colloidal	0,45	0,76
Sandy loam, noncolloidal	0,53	0,76
Silt loam, noncolloidal	0,60	0,91
Alluvial silts, noncolloldal	0,60	1,06
Ordinary firm loam	0,76	1,06
Volcanic ash	0,76	1,06
Stiff clay, very colloidal	1,14	1,52
Alluvial silts, colloidal	1,14	1,52
Shales and hardpans	1,82	1,82
Fine gravel	0,76	1,52
Graded loam to cobbles when noncolloidal	1,14	1,52
Graded silts to cobbles when colloidal	1,22	1,67
Coarse gravel, noncolloidal	1,22	1,82
Cobbles and shingles	1,52	1,67

(For sinuous channels, the velocities should be lowered. Percentage of reductions suggested by Lane vary from 5% for moderately sinuous to 22%, for very sinuous channels).

These values have been derived from different theories and from experimental observations (USBR, 1987; Maccaferri, 1990a). From Table 5.2, if the calculated water velocity in the spillway channel is higher than the maximum permissible velocity for the existing bed material, then the spillway channel design should be modified. There are two possibilities:

- increase the channel width and/or decrease the channel slope in order to reduce the water velocity,
- line the channel with materials capable of resisting the calculated water velocity.

After the characteristics of the channel have been modified, the whole computation procedure should be repeated until the values of all variables and parameters are satisfactory.

With a very short spillway channel, a reverse slope is often preferred, especially if the natural bed materials are not particularly resistant to water flow. With a reverse slope, the water velocity in the channel is lower than for a normal slope and the risks of channel erosion are reduced.

Protection of the sides and bottom

The minimum size of particles that resist transportation by water flow in the channel can be computed with Shields' diagram. If the the river bed material comprises a percentage of particles of a smaller size than determined by Table 5.2, the water flow can cause scouring in the channel. In this case, the channel bed has to be lined with a more resistant material, e.g. containing a higher percentage of gravel, rubble and stone, and a smaller percentage of sand and clay. This material must be properly graded in order to obtain a high percentage of particles (between 80 and 90 %) with a diameter larger than the one computed with Shields' diagram.

Some gabions baskets can be inserted perpendicularly across the channel as groynes in order to prevent bed scour. The top level of the gabions should be positioned a few centimeters above the channel bed lining, as shown in Plate 5.1.

In humid zones in low flow conditions a turfing protection can be used for lining the spillway channel.

PLATE 5.1
Linear protection of gabions on channel floor

If the channel cuts through layers of material particularly vulnerable to water erosion, the spillway channel banks may have to be protected with gabion retaining walls. Their cross section must be sufficient to resist earth pressure. Figure 5.6 shows two possible cross sections for retaining walls. Option A is to be preferred if banks are made of rather resistant materials and the earthfill behind the wall is properly compacted. In other cases, option B will be more convenient.

There can be a preferential flow in gabion retaining walls along the bottom and the sides of the gabion baskets. In these areas the internal structure of the gabions with stones and voids encourages an acceleration in the water flow. The erosive potential of the water is thus increased and the finest particles of material in contact with the gabion can be washed away. This erosion causes settlement of the gabion wall, eventually leading to failure. The most effective techniques to prevent erosion problems are briefly mentioned below. Details of these techniques are given in Chapter 7.

The problem of erosion in the contact zones between gabions and natural soil or artificial earthfill embankments is common to all gabion hydraulic structures, including retaining walls, weirs, counter-weirs, etc. There are several techniques to prevent this phenomenon:

FIGURE 5.6
Retaining wall options

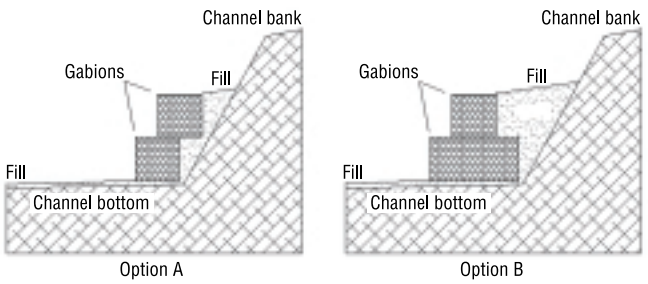

- interposition of a geotextile layer between the gabions and natural soil or artificial earthfill,
- building semi-permeable or impervious cutoff walls.

The first solution is the most suitable and a geotextile layer should be placed where the gabion structure is traversed by water flow. Alternatively semi-permeable or impervious cut-off walls can be built perpendicular to the flow. Semi-permeable cut-off walls can be formed by interposing a geotextile layer between two layers of gabions. Impervious cut-off walls are made of concrete.

SPILLWAY WEIR STRUCTURE

Shape of a weir

Weirs are classified according to the profile of their downstream side into three categories (Figure 5.7):

- vertical
- stepped
- battered

FIGURE 5.7
Downstream slope of a weir

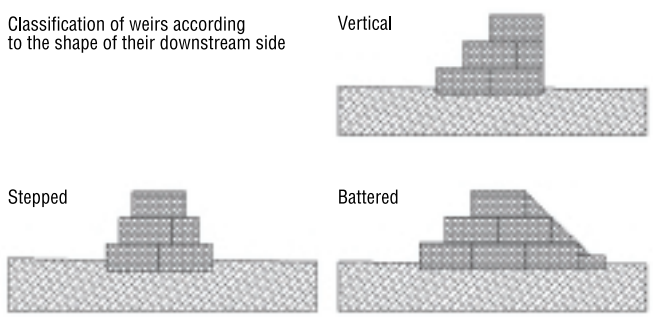

There are no strict rules for the choice of a particular profile. However, if the drop height does not exceed 3 m, the vertical profile is the most appropriate. Otherwise, the profile of the downstream side should be selected by taking into account the following factors:

- drop height,
- hydraulic head,
- characteristics of the materials used for the gabion filling;
- characteristics of the natural soils;
- presence of a stilling basin.

For drops greater than 3 m, the weir should be designed with steps, but only if the specific flow does not exceed 3 m^3/s.m, otherwise the turbulence and the water impact on the step can severely damage the gabions. From experimental observations on stepped and battered gabion weirs, it can be shown that if the drop is higher than 3 m and the specific flow does not exceed 1 m^3/s.m, a battered profile would also be suitable (Peyras, Royet, Degoutte, 1991).

Step- and battered weirs are not suitable across natural streams transporting a heavy sediment load, especially when gravel and stones are transported by the flow. The continuous abrasion of particles on and through the gabions can cause damage to the wire. A number of techniques that can be used to mitigate gabion failure are described in Chapter 9.

The upstream side of the weir is always stepped in order to facilitate bonding between the gabions and the earthfill, which acts as an impervious blanket. Moreover, the weight of the earthfill on the step profile adds stability to the structure, helping to prevent sliding and overturning of the structure.

Stilling basin

Flow conditions downstream of the structure usually give rise to a concentration of energy in a localised zone, close to the toe of the weir, and this needs to be dissipated. For that reason, a stilling basin should be constructed downstream of the weir.

Four types of stilling basins can be designed (Figure 5.8):

FIGURE 5.8
Types of weir

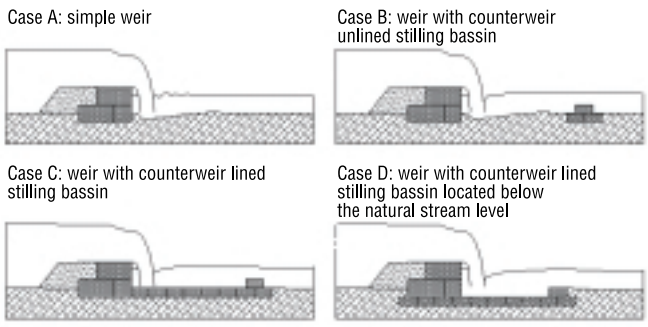

- simple, no structure (A),
- with counterweir, unlined stilling basin (B),
- with counterweir, lined stilling basin (C),
- with counterweir, lined stilling basin located below the natural river bed (D).

The methods used to calculate the required energy dissipation immediately downstream of the weir are illustrated below.

Hydraulic design

The procedures are primarily related to the hydraulic design of weirs with a vertical downstream face which are the simplest to design and to build. Hydraulic design procedures for stepped and battered weirs are more complex. However, weirs with a stepped downstream side, can often be designed in the same way as vertical weirs, if the flow from the weir crest falls directly beyond the weir toe.

When starting to design a weir, the only known parameter is its height. The weir height depends on the difference between the design slope and the riverbed slope. If the weir is expected to be more than 2 to 4 meters high, it could be cheaper to build more than one weir, depending on the natural soil characteristics and on the quality of construction materials.

The flow-depth relationship over a weir is:

$$Q = b\ h\ m\ (2gh)^{0.5}$$

where:
h: water depth above the weir (m)
Q: design flow (m3/s)
m: discharge coefficient (-)
b: weir width (m)

Discharge coefficient (m) is tabulated according to water head (h) and weir crest length (Figure 5.9 and Table 5.3).

Choosing the correct value of the discharge coefficient is complex, as it also depends on the crest conditions which may vary during runoff, e.g. if shrubs carried by the flow get trapped in the gabion baskets. The values of discharge for submerged weirs, i.e. with the downstream water level higher than the weir crest is to be corrected by a coefficient derived from hydraulic laboratory experiments as given in Figure 5.4.

FIGURE 5.9
Schematic representation of a weir

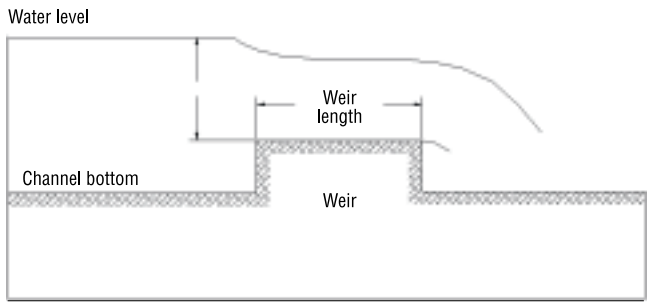

TABLE 5.3
Discharge coefficients

Head (m)	Weir length (m)									
	0,15	**0,30**	**0,45**	**0,60**	**0,75**	**0,90**	**1,00**	**1,20**	**3,00**	**4,50**
0,06	0,347	0,335	0,327	0,317	0,309	0,304	0,297	0,292	0,310	0,334
0,12	0,364	0,340	0,329	0,325	0,324	0,322	0,317	0,312	0,319	0,337
0,18	0,384	0,343	0,329	0,325	0,324	0,334	0,335	0,337	0,337	0,337
0,24	0,411	0,355	0,334	0,324	0,324	0,333	0,334	0,334	0,335	0,329
0,30	0,414	0,372	0,343	0,332	0,329	0,330	0,333	0,334	0,334	0,328
0,36	0,414	0,384	0,357	0,337	0,330	0,329	0,333	0,332	0,335	0,329
0,42	0,414	0,399	0,364	0,345	0,334	0,329	0,330	0,330	0,333	0,329
0,48	0,414	0,409	0,373	0,360	0,343	0,334	0,332	0,330	0,329	0,328
0,54	0,414	0,412	0,383	0,359	0,342	0,334	0,332	0,330	0,329	0,328
0,60	0,414	0,411	0,383	0,355	0,344	0,340	0,334	0,330	0,329	0,328
0,75	0,414	0,414	0,409	0,383	0,360	0,350	0,340	0,333	0,329	0,328
0,90	0,414	0,414	0,414	0,399	0,380	0,364	0,341	0,332	0,329	0,328
1,05	0,414	0,414	0,414	0,414	0,398	0,370	0,344	0,334	0,329	0,328
1,20	0,414	0,414	0,414	0,414	0,414	0,383	0,348	0,337	0,329	0,328

For submerged spillways (downstream water level higher than the crest level) apply corrective coefficient given in Table 5.4

TABLE 5.4
Discharge corrective factor for submerged weirs

Fawer formula for submerged weirs: $Q = mCB\sqrt{2gH3/2}$											
a/Ho	0,00	0,10	0,20	0,30	0,40	0,50	0,60	0,70	0,80	0,90	1,00
C	0,10	0,99	0,96	0,92	0,88	0,81	0,71	0,52	0,40	0,32	0,00
a/Q2/3	0,00	0,10	0,20	0,30	0,40	0,50	0,60	0,80	1,00	1,20	1,40
C	1,00	1,00	0,99	0,96	0,92	0,88	0,81	0,71	0,52	0,40	0,32

a: Downstream hydraulic head above the crest
Ho: Upstream hydraulic head above the crest

The discharge coefficient (m) should be selected at the lower end of the scale in order to be on the safe side, corresponding to higher water depths for a given design flow. For example, assuming a gabion weir completely filled with sediments upstream and with a water depth between 1 and 2 meters, a conservative discharge coefficient value would be of the order of 0.35. The maximum water depth should not exceed 2 to 3 meters, otherwise the weir width should be increased.

After having fixed the weir main dimensions (height, width, water head) it is necessary to verify that the energy dissipation is concentrated immediately downstream of the structure. This condition is satisfied when flow conditions are sub-critical.

The next step is to determine whether a hydraulic jump occurs between the super-critical flow at the toe of the weir and the sub-critical flow further downstream. Several methods exist for this verification. The choice of the most appropriate method depends on the weir type (USBR, 1987; Maccaferri, 1990a).

Simple weir

For shallow weirs with limited specific flow and energy to be dissipated, the gabion structure can be constructed with no stilling basin, especially if the streambed material is resistant. Otherwise the water would scour a hole downstream of the weir. It would then be necessary to calculate the hole depth and its distance from the toe of the weir.

With reference to figure 5.10, considering that the flow on the top of the weir is critical, the distance of the free fall X from the downstream face of the weir can be computed with the following empirical relationship:

$$X \cong \sqrt{g(z_g - f_g)}\sqrt{2\frac{z_g - f_3}{g}} \cong$$

$$\cong \sqrt{2(z_g - f_g)(z_g - f_3)}$$

Scour depth is computed using the Schoklitsch relationship, expressed as:

$$z_3 - f_b = 4.75\frac{(z_0 - z_3)^{0.2} q^{0.57}}{d_t^{0.32}}$$

where:
$\mathbf{z_3}$, $\mathbf{f_b}$, $\mathbf{z_0}$ are expressed in meters
q expressed in m^3/s.m represents the specific flow per metre of weir width
$\mathbf{d_t}$ is the sieve diameter through which 90% of streambed material passes

For safety reasons, the weir foundation level should be lower than the depth of scour.

FIGURE 5.10
Simple weir

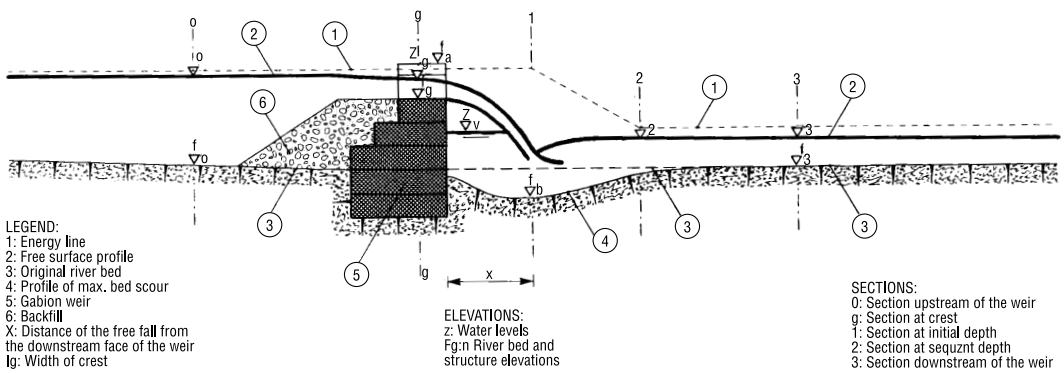

Weir with counterweir and unlined stilling basin
The erosion phenomenon caused by energy dissipation downstream of the weir can be reduced with the construction of a counterweir. This will cause the water level downstream of the weir to rise and consequently, act as a buffer to the water falling from the spillway, thus reduce the scour depth.

The counterweir has to be placed at a distance from the weir and at a level which allows the occurrence of a hydraulic jump. The counterweir height is calculated using the depth-flow relationship (see figure 5.11):

$$Q = \mu l_c (z_2 - f_c)\sqrt{2g(z_2 - f_c)}$$

where:
lc: weir width (m)
m: discharge coefficient (-)
g: acceleration from gravity (m/s2)
$\mathbf{z_2}$: water level upstream of the counterweir (m)

z_2 should be assigned a value which limits the scour depth, then f_c is computed by trial and error.

The hydraulic jump length is evaluated with the following empirical relationship:

$$L_{12} = 6.9[(z_2 - f_b) - (z_1 - f_b)] = 6.9[z_2 - z_1]$$

The total length of the stilling basin is:

$$L_t = L_{12} + X$$

with X as calculated for a simple weir.

With a counterweir, the energy to be dissipated downstream of the structure should be calculated and, if necessary, appropriate features should be designed to increase the dissipation to prevent scour in the streambed. To quantify energy dissipation, the hydraulic flow conditions downstream of the counterweir in the stream reach are computed by trial and error using the uniform flow equation of Manning together with the equation of continuity.

FIGURE 5.11
Weir with counterweir and unlined stilling basin

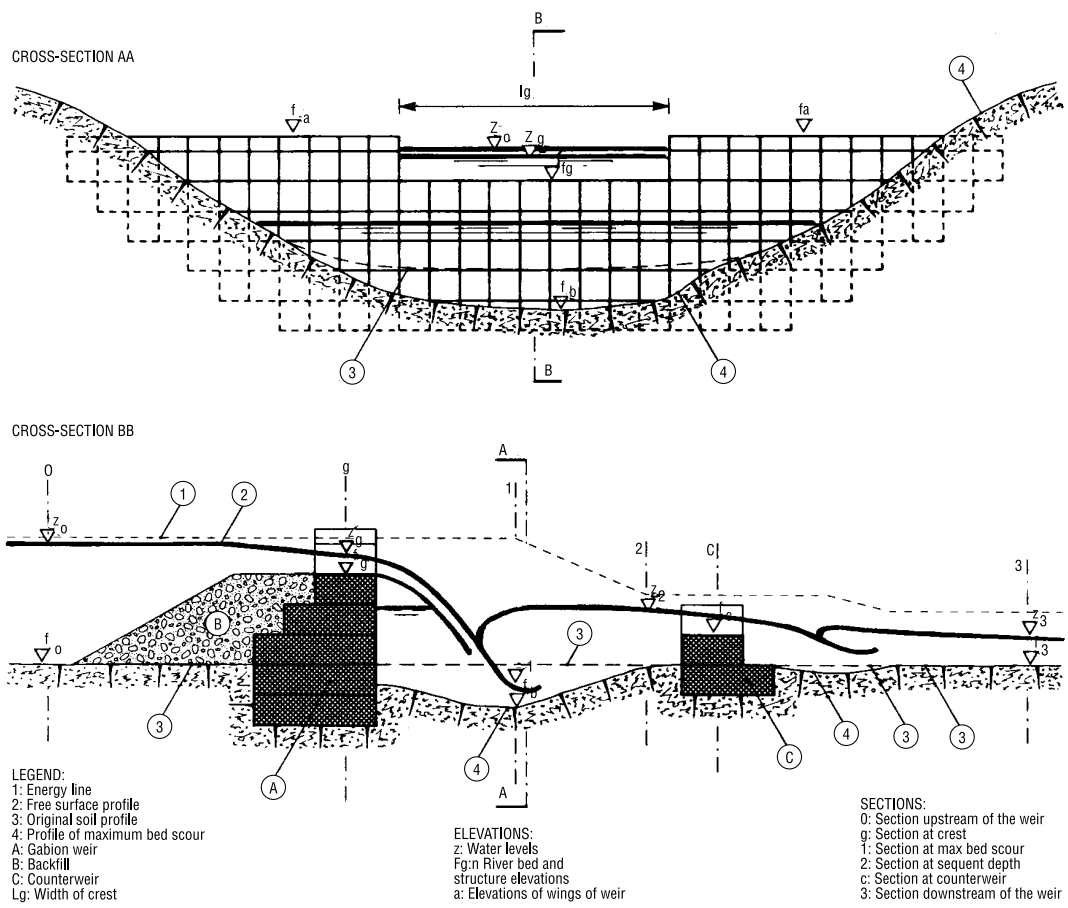

Weir with counterweir and lined stilling basin

If the streambed material is not resistant to the scour force (e.g. comprises fine grain sizes), the stilling basin should be lined otherwise it will be necessary to limit the weir foundation depth. A layer of gabions should be used for lining the stilling basin bottom, as shown in figure 5.12.

All the dimensions of the gabion structure and the water levels can be computed using flow discharge-depth relationships with the same simplifying hypotheses. With reference to figure 5.18, the water depth of the supercritical flow is given by:

$$Q(z_1 - f_b) = l_b[2g(Z_0 - f_b)]^{0.5}$$

Energy dissipation by means of a hydraulic jump will take place inside the stilling basin if the water depth is sub-critical. These conditions are expressed by:

$$(z_2 - f_b) = -\frac{(z_1 - f_b)}{2} + \\ + \sqrt{\frac{2Q^2}{gl_b^2(z_1 - f_b)} + \frac{(z_1 - f_b)^2}{4}}$$

for obtaining this water depth ($z_2 - f_b$) at short distance from the toe of the weir, a counterweir of length l_c should be designed and its height can be computed through the usual depth-flow relationship:

$$Q = \mu l_c(z_2 - f_c)\sqrt{2g(z_2 - f_c)}$$

The length of the stilling basin is the total distance from the weir to the point where super-critical flow conditions occur plus the length of the hydraulic jump. The former distance is calculated as follows:

$$L_{g1} = \frac{(z_g + f_g - 2f_b)\sqrt{z_g - f_g}}{\sqrt{z_g + f_g - 2z_v}}$$

and the hydraulic jump length is given by:

$$L_{12} = 6.9(z_2 - z_1)$$

It should be further verified that the stilling basin flow conditions are independent and not influenced by the flow in the downstream reach. This is confirmed if the total hydraulic energy downstream is lower than that on the counterweir.

FIGURE 5.12
Weir with counterweir and lined stilling basin

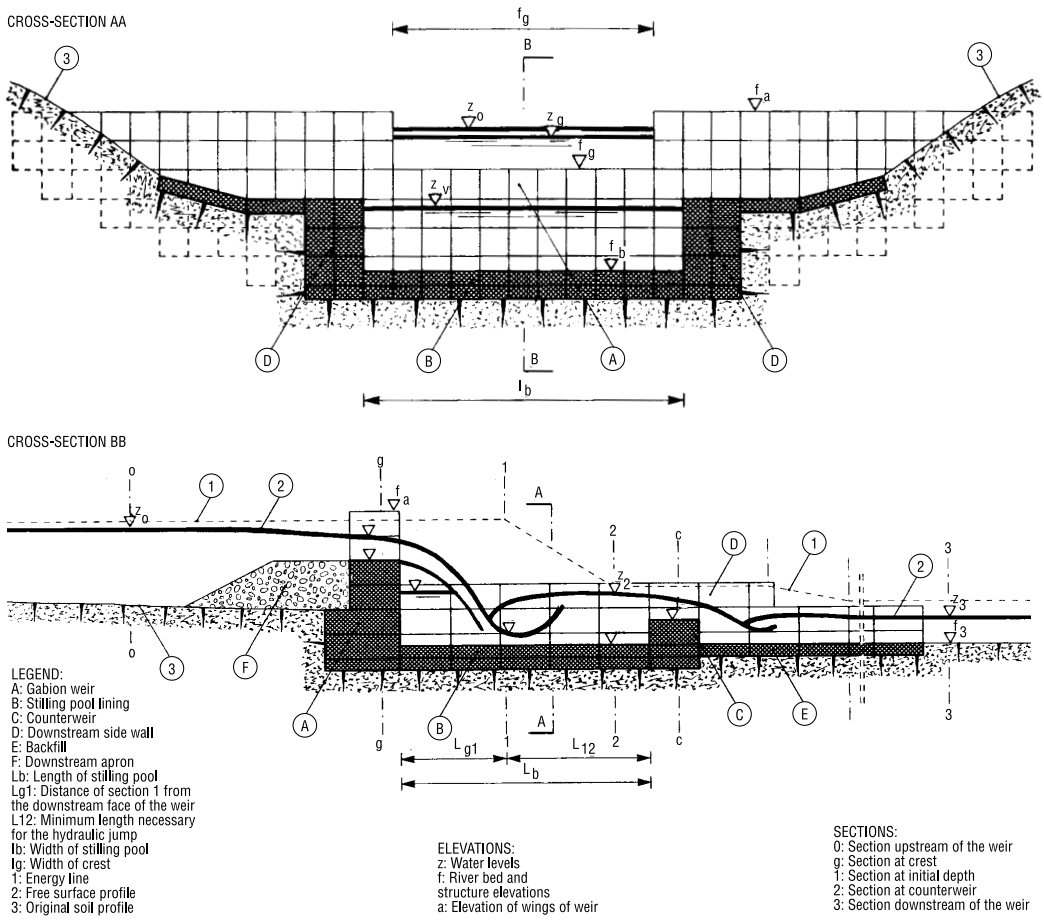

When the upstream side of the weir is filled with sediment up to the crest, existing hydraulic relationships that characterize the stilling basin can be expressed with reference to the *drop number* (D) which is defined by the expression:

$$D = \frac{q^2}{g(f_g - f_b)^3}$$

Where $(f_g - f_b)$ is the drop height.

Once the drop number is determined, all the characteristics of a weir and stilling basin can be obtained by applying the following relationships:

$$\frac{L_{g1}}{(f_g - f_b)} = 4.30 D^{0.27}$$

$$\frac{(z_v - f_b)}{(f_g - f_b)} = 1.00D^{0.22}$$

$$\frac{(z_1 - f_b)}{(f_g - f_b)} = 0.54D^{0.425}$$

$$\frac{(z_2 - f_b)}{(f_g - f_b)} = 1.66D^{0.27}$$

$$L_{12} = 6.9(z_2 - z_1)$$

In order to reduce the quantity of gabions required for lining the stilling basin, it is useful to place gabion lining only in the zone close to the weir toe. The remaining portion of the stilling basin can be protected with large stones. In this case, the gabion lining must be extended at least to a distance from the weir toe greater than Lg_1, in order to protect the portion of the stilling basin which is threatened by water falling from the weir crest.

Weir with counterweir and lined stilling basin located below the natural river bed

The flow inside the stilling basin is influenced by the sub-critical flow downstream (Figure 5.13). To obtain all the characteristics of the stilling basin, the composite system of equations below must be solved simultaneously:

$$(z_0 - f_b) + \frac{Q^2}{2g\Omega_0^2} = (z_1 - f_b) + \frac{Q^2}{2g(z_1 - f_b)^2 l_b^2}$$

$$(z_2 - f_b) = -\frac{(z_1 - f_b)}{2} + \sqrt{\frac{2Q^2}{gl_b^2(z_1 - f_b)} + \frac{(z_1 - f_b)^2}{4}}$$

$$(z_3 - f_b) + \frac{Q^2}{2g\Omega_3^2} \geq (z_2 f_b) + \frac{Q^2}{2gl_b^2(z_2 - f_b)^2}$$

Some parameters and variables needed to solve the above system are already known and the only unknown terms are the values of z_1, z_2 and f_b. It is useful to fix a conservative value for f_b, in order to compute the value of z_1 in the first equation and the value of z_2 in the second one. At this point, if the third equation is not satisfied, the calculation process has to be repeated for another value of f_b until the third equation is satisfied.

FIGURE 5.13
Weir with counterweir and lined stilling basin located below the natural river bed

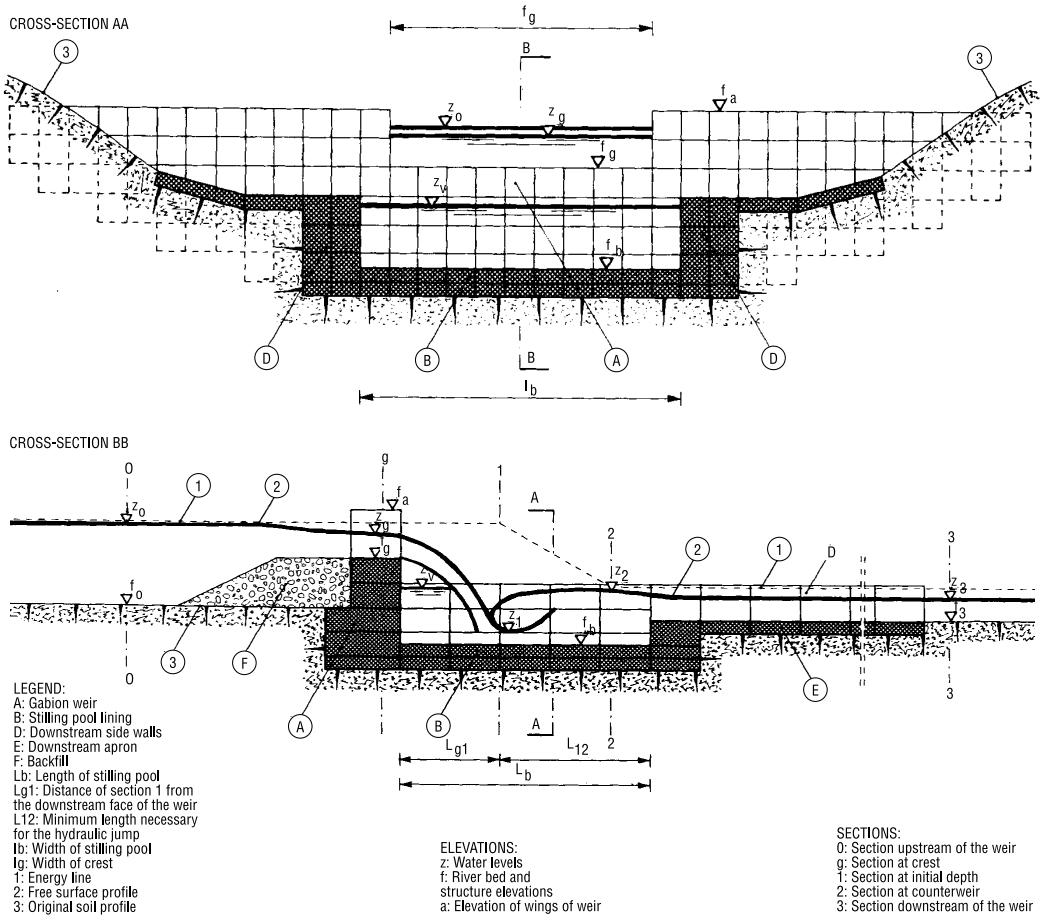

Stepped weirs

In stepped weirs, the energy dissipation takes place on the steps and from experiments, the length of the stilling basin can consequently be shortened by 10%-30%. These are generally designed when low specific discharge and low drop height conditions occur. Experimental observations, conducted by (Peyras, Royet, Degoutte, 1991) show that stepped weirs are particularly convenient for specific flows less than 3 m^3/s. For higher specific flow values, the gabion steps could be damaged by the impact of the falling water and are not recommended unless special lining is provided.

Battered weirs

Battered weirs are generally well suited for significant drop heights and low specific flow conditions (inferior to 1 m^3/s). The specific flow has to be low to prevent gabion damage: violent flow impact can cause abrasion from stones against the gabion wire, leading to stone or wire breakage. Transported materials colliding with gabions can also cause wire breakage. For specific flow higher than 1 $m^3/m/s$, battered weirs will require a reinforced concrete lining. A detailed description of the methods for designing the stilling basin downstream of battered weirs can be found in USBR (1987).

Seepage

The water level difference between the upstream and downstream sides of a weir creates a hydraulic gradient which induces seepage through and underneath the structure. The seepage characteristics largely depend on the soil materials. Given that gabion structures are generally built on pervious soils, the seepage phenomenon can provoke the formation of springs downstream of the structure. Substantial spring flow can transport particles of soil material, initiating internal erosion, progressively increasing water seepage and, again in turnthe amount of material transported and eventually cavities are created underneath the foundations leading to subsidence and failure of the structure.

In order to test the weir against the possibility of a piping failure, the flow net corresponding to the seepage has to be empirically determined. This will allow the seepage flow path and the hydraulic gradient underneath the structure to be computed (see Figure 5.14). For small structures, however, the test against seepage can be generally accomplished using the simplified Bligh (USBR, 1987, Maccaferri, 1990a) method. According to this method, the structure is safe against seepage when the following relationship is verified:

$$L > c\,\Delta h$$

where:

L: seepage path below the structure (the length of vertical is tripled in the sum)

c: Bligh coefficient depending on soil characteristics (Table 5.5),

Δh: water level difference between the upstream and downstream faces of the weir.

FIGURE 5.14
Seepage flow under a dam

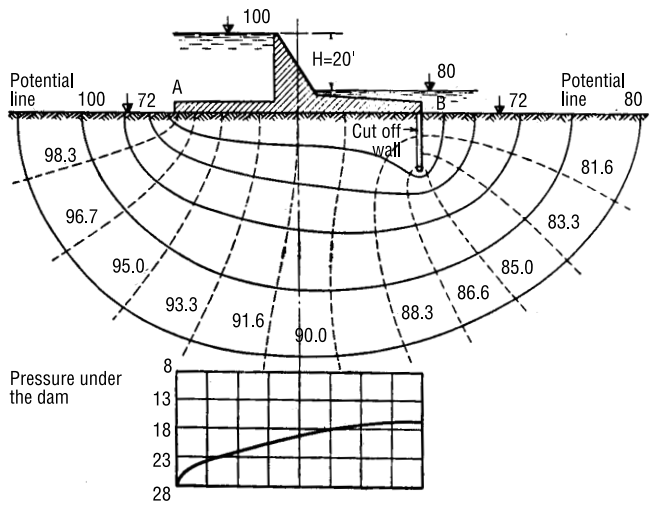

TABLE 5.5
Bligh coefficient (c) values

Type of soil	*c*	Size of particle (mm)
Fine silt and mud	20	0,01 – 0,05
Coarse silt and very fine sand	18	0,10
Fine sand	15	0,12 – 0,25
Medium sand	12	0,30 – 0,50
Coarse sand	10	0,60 – 1,00
Gravel	9 - 4	> 2,00
Hard clay	6 - 3	0,005

If the above relationship is not verified, then the weir section has to be modified by lengthening the seepage path. This can be achieved in two ways (see Figure 5.15):

- building a gabion apron downstream of the weir (case A)
- building an impervious cut-off wall below the structure (case B)

FIGURE 5.15
Methods for lengthening seepage paths

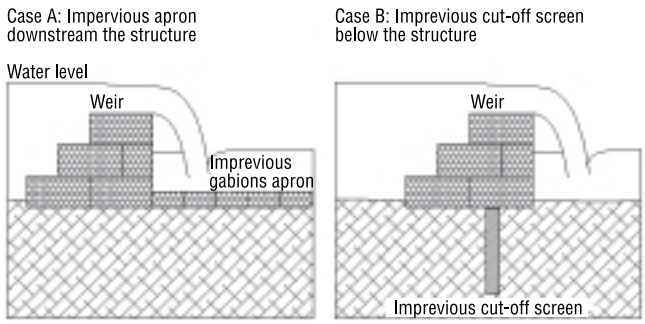

The actual flow net would correspond to the one designed in figure 5.20 only in the hypothesis of an impervious structure, otherwise the seepage reticule will be influenced by the high permeability of the gabions, causing the flow net to become distorted with the flow and the head lines to cross at non-square angles as shown in figure 5.16.

FIGURE 5.16
Hypothetical flow for permeable gabion weir

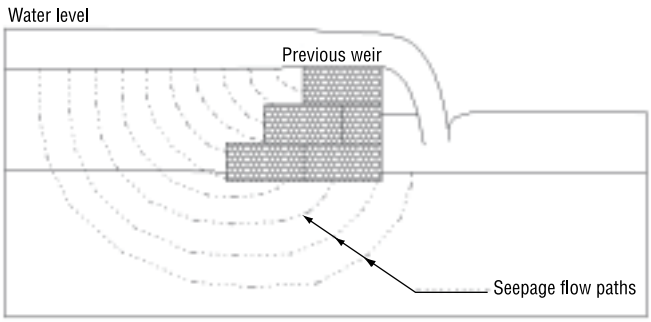

Soil particles can be easily transported by seepage. In fact, the soil in contact with the gabions is exposed to both water seepage pressure from below and by the water pressure in the body of the weir. Seepage pressure difference is generally highest at the interface between the foundation soil and the gabion and it can remove particles of material in the contact zone. To eliminate this problem, a filter layer of graded material, such as gravel, should be interposed between the gabions and the soil. Alternatively, a layer of geotextile is generally easier to install. In both instances this layer will progressively be obstructed by particles transported by water seepage and will consequently

become impervious. Another feasible solution is the placing of an impervious membrane between the gabions and the soil so that the weir is rendered completely impervious.

Stability analysis

This section describes the methods usually used to test the stability of gabion structures against both horizontal thrusts and vertical loads. Four different stability tests for gabion structures have to be performed:

- against overturning,
- against sliding,
- against uplift
- against excessive pressure on foundation soil.

Load analysis
With respect to figure 5.17, loads on the weir structure are explained below:

FIGURE 5.17
Forces acting against a gabion weir

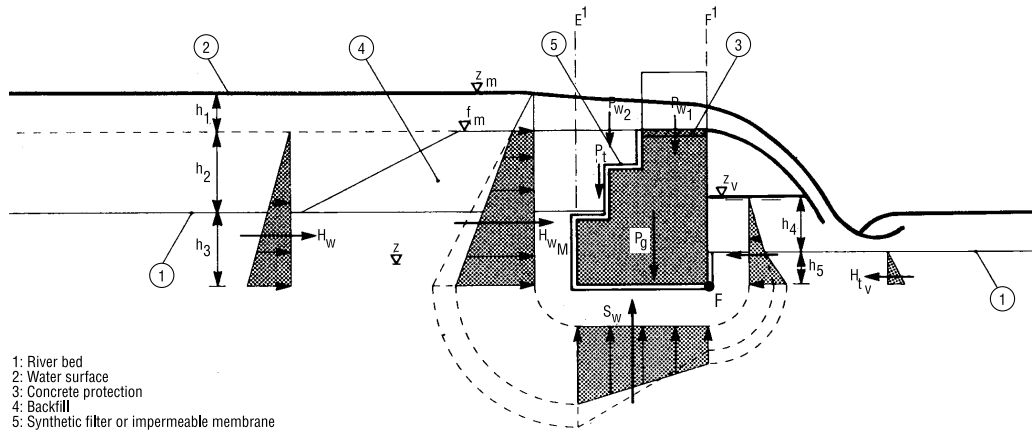

Horizontal forces

Water pressure:
$H_{wm} = 0.5\ \gamma_w\ (2\ h_1 + h_2 + h_3)\ (h_4 + h_5)$
on the upstream side

$H_{wv} = 0.5\ \gamma_w\ (h_4 + h_5)^2$
on the downstream side

Thrust from earthfill:
$H_{tm} = 0.5\ \gamma_{tw}\ \lambda_a\ (h_2 + h_3)^2$
on the upstream side

$H_{tv} = 0.5\ \gamma_{tw}\ \lambda_a\ h_5^2$
on the downstream side

Vertical loads

Water:
$P_{w1} = S_{w1}\ \gamma_w$
$P_{w2} = S_{w2}\ \gamma_w$

Soil:
$P_t = S_{soil}\ \gamma_{t1}$

Water uplift:
$S_w = \gamma_w\ b\ (h_4 + h_5) +$
$+ 0.5\ \gamma_w\ b\ (h_1 + h_2 + h_3) - (h_4 + h_5)$

Weight of the structure:
$P_g = S_{sub.\ struc.}\ \gamma_{g1} + S_{dry\ struc.}\ \gamma_g$

where:

γ_w water specific weight (between 1000 and 1100 kg/m^3),
γ_g gabion specific weight ($\gamma_g = \gamma_s (1 - n_g)$),
γ_s material specific weight (see Table 5.6 for the values),
n_g gabions porosity (generally about 0.3),
γ_{g1} specific weight of saturated gabions ($\gamma_{g1} = \gamma_s (1 - n_g) + n_g \gamma_w$),
γ_{tw} specific weight of submerged soil ($\gamma_{tw} = (\gamma_s - \gamma_w) (1 - n)$),
n soil porosity,
γ_{t1} specific weight of saturated soil ($\gamma_{t1} = \gamma_s (1 - n) + n \gamma_w$),
λ_a coefficient of active earth pressure ($\lambda_a = tg^2 (45 - \varphi / 2)$),
φ soil angle of friction of the earthfill.

TABLE 5.6
Rock specific weight

Type of rock	Unit weight Kg/m^3
Basalt	2900
Granite	2600
Trachyte	2500
Tuff	1700
Soft limestone	2200
Hard limestone	2600
Sandstone	2300

Overturning
The test must be conducted in relation to the structure overturning around point F (see figure 5.17). The detailed overturning and stabilizing forces are as follows:

overturning forces:

- horizontal thrusts by water (H_{wm} , H_{wv}),
- horizontal thrusts by soil (H_{tm}),
- water uplift (S_w)

stabilizing forces:

- structure weight (P_g),
- water weight (P_{w1}, P_{w2}),
- soil weight (P_t),
- horizontal thrusts on the downstream side by water and soil (H_{wv} , H_{tv}).

Multiplying the forces for their respective arms of leverage to derive all the overturning and stabilizing moments, the following relationship gives the stability coefficient of the structure:

$s_r = M_s / M_r$ coefficient against overturning

where M_s is the sum of the stabilizing moments and M_r is the sum of overturning forces. For small structures $s_r > 1.3$. For larger structures, the stability safety factor against overturning will take up higher values of 1.5 to 1.7.

Sliding
To carry out this test, the horizontal (S H) and the vertical (S V) forces must be calculated and the following relationship can be verified:

$$\Sigma V < tg\ \phi\ \Sigma H$$

where j represents the friction angle between the gabions and the foundation soil. A value generally assumed for the friction angle is j = 35° with a corresponding tg j = 0.7. In this case, the stability coefficient against sliding will be expressed as:

$$s_s = \text{tg}\ \phi\ \ \Sigma H / \Sigma H$$

As for overturning,, the safety factor s_s must be greater than 1.3 for small structures. For more important structures, greater security is required.

Uplifting

Lining the stilling pool is usually necessary to protect against seepage failures. Where this lining is constructed using gabions or mattresses laying on a reverse filter or a geotextile, it is necessary to check the stability of the lining against hydraulic uplift, and check that the uplift force due to seepage water is not greater than the combined weight of the lining and of the interstitial water, filters, and the water passing over the lining.

It is therefore necessary to evaluate the distribution of pressures under the stilling pool by drawing a flow diagram or by using the simplified method already suggested. With reference to figure 5.24, the pressure, p, at each point of the foundation is

$$p = \gamma_w x \left[\left(z_0 - \frac{z_0 - z_3}{L_f} \right) - z_x \right]$$

If h is the depth of the water above the apron and s the thickness of the apron, then the coefficient of stability against uplift is

$$S_g = \frac{(\gamma_{gl} xs) + (\gamma_w xh)}{p}$$

Acceptable values of safety factor S_g are between 1.1 and 1.2.

Resistance of the foundation soil

For each section under examination, all the forces H^{wM}, H_{wV}, H_{tM}, H_{tV}, P_{w1}, P_{w2}, P_t, P_g and S_w of Figure 5.17 are computed for the worst case.

The intensity and the trend of the resultant R of the acting forces, its inclination and the centre of gravity, are then determined.

It is conservatively assumed that the gabion foundation surface remains flat and that the foundation soil is much less rigid than the gabion structure. With regard to this second assumption, the results of experiments indicate that the rigidity of gabions is comparable to that of soil.

If the centre of gravity of X is within the middle third – MN – the pressure is distributed over the whole foundation, and the maximum pressure, σ_B, at the downstream toe, B, in kg/cm^2, is found from:

$$\sigma_b = 6x \frac{Vx\overline{XM}}{100x\overline{AB}^2}$$

where:

V is the vertical component of the resultant R (kg); and XM and AB are distances (cm).

If the centre of gravity is coincident with the extreme edge of the middle third (*N*), the maximum pressure, σ_B, is:

$$\sigma_b = 2x\frac{V}{100x\overline{AB}}$$

A centre of gravity outside the middle third - MN - is to be avoided, since, in accordance with the assumption made above, only part of the foundation is utilized. In practice this is an unlikely situation in a gabion structure due to its great flexibility, but in such a case, the pressure σ_B would be:

$$\sigma_b = 2x\frac{V}{100x3x\overline{XB}}$$

The maximum pressure σ_B should be lower than the foundation soil bearing capacity given for various soils in Table 5.7.

TABLE 5.7
Indicative bearing capacities of soils

Type of soil	Bearing capacity Kg/m^2
1 Uncompacted, borrow soil	0 - 1
2 Compacted cohesionless soils	
a) sand, grain diameter <1 mm	2
b) sand, grain diameter 1-3 mm	3
c) sand and gravel (at least 1/3 gravel)	4
3 Cohesive soils, classed by to water content	
a) fluid; plastic fluid	0,0
b) plastic soft	0,4
c) plastic solid	0,8
d) semi-solid	1,5
e) solid	3.0
4 Rock in good condition (if fissured or liable to disaggregation, the indicated bearing capacitymust be reduced to less than half)	10 - 15

Chapter 6

Embankment design

Several factors need to be considered when designing an earth embankment:

- The design must reflect the available construction materials;
- If the dam is constructed above pervious foundation materials the water loss must be estimated and design measures incorporated to limit the loss to acceptable levels;
- Seepage within the embankment soil and at junctions of the embankment with gabions, pipes, etc. must be contained to prevent eventual sub-surface piping and erosion;
- To prevent excessive deformation of the embankment undue settlement and slope failures of the upstream and downstream faces should be avoided.

Construction materials

Construction materials have to be located during the investigation phase for the design of the embankment (Chapter 1). If sufficient deposits of clay material are available they may be used for the whole embankment which is then called an homogeneous embankment. Soils in homogeneous embankments need to have a silt/clay content of at least 20% to be sufficiently impermeable.

More commonly these materials may be in short supply within an economic haul distance of the embankment and a zoned embankment becomes feasible. This incorporates a clay core of relatively impermeable material flanked by zones of other material in the upstream and downstream shoulders. Other materials with more specialist properties are also needed for components such as drainage blankets, filter materials, etc. These components are described later but the materials properties are described below.

Impervious material for upstream blankets

The material for upstream blankets and for the lining of associated canals should, of course, be more impervious than the in-situ foundation soils in order to justify their use.

The hydraulic gradient through the blanket or lining will be high, so it is essential that the grading of the materials is such that piping of the fine particles from the blanket or lining through the more pervious foundation material is prevented. This impervious material will also be exposed to the erosive forces of flowing water and may also be exposed to alternating wet and dry conditions. Earth material used for exposed lining or blanket must not be subject to shrinkage or swelling.

Aggregates for concrete

Most factors that determine the suitability of a material for aggregate are related to the geological history of the deposit. These factors include size and shape of the particles, grading and degree of uniformity of the particles.

Fine blending sand may sometimes be obtained from windblown deposits, but stream deposits are the most common, and generally the most desirable, because individual soil particles are usually rounded, streams exercise a sorting action which may improve grading and abrasion caused by stream transportation and deposition leads to a partial elimination of soft material.

Alluvial fans are frequently used as sources of aggregates, but they often require some kind of processing.

When natural sand and gravel are not available it is necessary to produce aggregates by quarrying and crushing solid rock.

Aggregates for filters and drains

The material for filters and drainage must be free-draining so that high heads can dissipate without movement of either the filter material or the surrounding soil. Often a single layer of material will be inadequate to fulfil these conditions and a multi-layer filter blanket is to be used. The most important factor is a close control on the grading.

Rock for rip-rap, gabions and rock-fill

The spacing of discontinuities in the rock mass determines the maximum size of individual rock pieces that can be expected. The blasting pattern is an important design consideration because this will ultimately provide rock of the required size for processing. A blasting trial sufficient to remove 10-20 m^3 of rock is desirable at final design stage.

Suitable earthfill material

The best embankment materials for the construction of an homogeneous earthfill dam and considering all technical characteristics such as workability, impermeability, shear strength resistance and behaviour when in contact with water, are the following:

Clayey, silty, sandy gravel classified GC by the USCS (Unified Soil Classification System):

This material corresponds to a well distributed mix of soils ranging from fines (defined as containing from 25% to 50% of clayey silty soil) to the coarser gravely and sandy fraction.

The technical behaviour of this soil is excellent because the particle distribution and the presence of clayey and silty material fills the voids and consequently increases its impermeability. The presence of the coarser fraction guarantees a good shear strength, a negligible shrinkage, a good resistance to erosion and piping. In addition, this type of material has a good to excellent workability and accepts simple filters between the body of the earth embankment and the upstream rock protection.

Clayey silty sand classified SC by the USCS:

This has similar characteristics to the GC soil concerning impermeability, shear strength and negligible shrinkage but SC has lower resistance against erosion and piping. It is then necessary to design a suitable filter and transition filter in order to control the eventual seepage in the dam body with consequent transportation of soil particles (piping). This type of material is rather commonly found in alluvial deposits and in river terraces.

WATER LOSS AND PIPING

Mechanism

There will always be some seepage through the embankment fill material and through the foundation soils. The magnitude and rate of the seepage flow will depend on the permeability of these materials. The permeability of the embankment fill or core will depend on the quality of its construction (see Chapter 7). The permeability of the foundation materials should be measured during the geotechnical investigations. With these permeability characteristics it is possible to predict the level of flow and decide whether it is of such concern that measures should be designed to decrease its effect.

The seepage is caused by the increased head of water caused by the imposition of the dam (Chapter 5). This increases the potential velocity of flow which also depends on the nature of the soils. Fine grained soils of poor cohesion, such as silts and fine sands are particularly susceptible to piping and erosion. The nature of the flow pattern is illustrated in Figure 6.1.

FIGURE 6.1
Pattern of seepage flow in earth dams

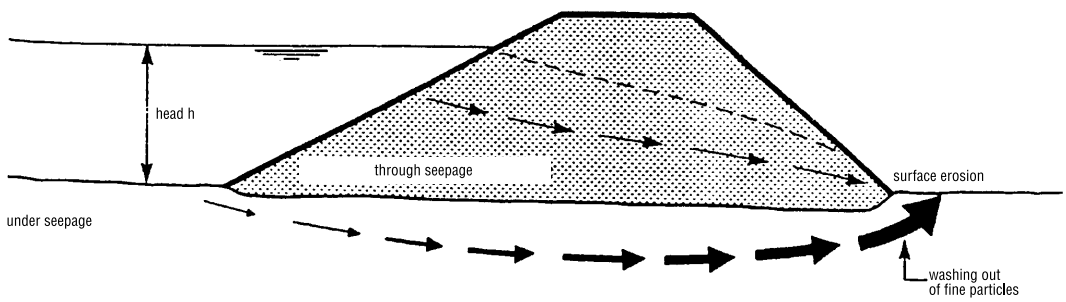

If the hydraulic gradient is too steep the potential will exist for the water exiting at the toe of the downstream slope to carry soil particles with it. This erosion will work back under the dam towards the reservoir, creating a pipe. Water flow will increase along the pipe, carrying more soil, etc., etc. Eventually the pipe will enlarge and the dam will fail.

There are three methods that may be employed singly or together to design against seepage loss:

Provision of downstream drainage
Provision of a cut-off trench
Provision of an upstream blanket

The latter two methods are mentioned in chapter 5 concerning the protection of the gabion weir.

Downstream drainage

The water that escapes from the reservoir through the foundation soils comes out of the ground as springs downstream from the impervious portion of the dam. However, the locations of these are unknown until the reservoir is filled and the dam begins to function and once they begin to flow the risk of piping has already begun. The solution is to design a downstream drainage reverse filter to be incorporated during construction.

The size and grading of the filter material is normally calculated on the basis of the grading of the material it is protecting, using the Terzaghi Filter Rule (Terzaghi and Peck, 1967):

$$\frac{\text{D15 (of filter)}}{\text{D85 (of foundation)}} < 4 \text{ to } 5 > \frac{\text{D15 (of filter)}}{\text{D15 (of foundation)}}$$

This requires that to prevent the foundation soil from passing through the voids of the filter the 15% size of the filter must not exceed 4 to 5 times the 85% size of the soil. To keep seepage forces in the filter low and acceptable the 15% size of the filter also must be greater than 4 to 5 times the 15% size of the soil.

If detailed assessments of grain size are not possible the following rule of thumb can be used:

Place a layer of fine sand against the natural ground and embankment material
Next place a layer of coarse sand
Next place a layer of gravel in the centre of the drain

Toe drains may be in the form of a horizontal blanket at least 0.6m thick extending in under the downstream shoulder or in the form of a triangular wedge with a height about one third the height of the dam (see Figure 6.2). The water may be led away by an evacuation drain formed of coarse free-draining granular fill, again filter protected as necessary. Increasingly, natural soil filters are being replaced by geotextile filters.

FIGURE 6.2
Toe drains for downstream drainage

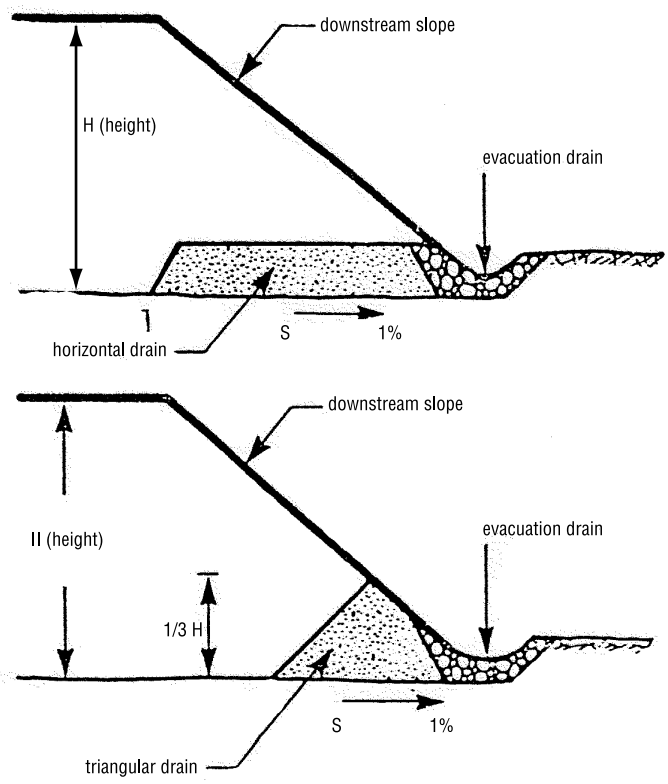

Cut-off trench

If the dam is located on pervious foundation soils water can escape from the reservoir by underseepage. A cut-off trench can be used to form an impermeable barrier below the base of the dam, through the pervious soil and down to the impermeable stratum (see Figure 6.3). The cut-off would comprise a sloping sided excavation filled with compacted impermeable soil, which may be a downward extension of the core. Such cut-offs are extremely effective because they can be closely supervised during construction. The base of the cut-off trench should be at least 3m wide to allow machinery to work for effective compaction and the side slopes should be no steeper than 1 vertical to 1 horizontal.

If the pervious soil is very thick the cut-off trench may have to be terminated as a partial cut-off. It's function then is to extend the flow path and thus reduce the hydraulic gradient. In this case it would probably be supplemented by an impermeable upstream blanket.

FIGURE 6.3
Cut-off trench

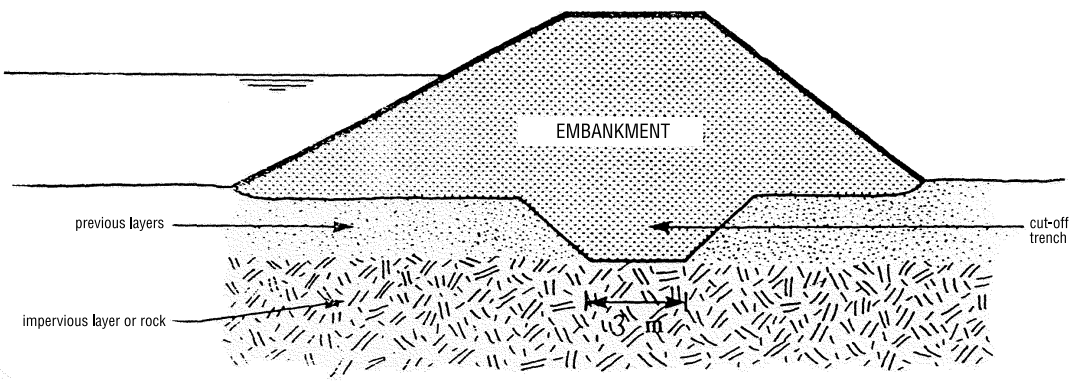

Impermeable upstream blanket

The function of an upstream impermeable blanket is to increase the flow path that the water has to take from the reservoir to the nearest exit and, therefore, to decrease the hydraulic gradient. The blanket is extended from the upstream toe of the embankment (for a homogeneous dam) or from the upstream edge of the core in a zoned embankment (see Figure 6.4). The thickness of the blanket should be a minimum of 0.6m and up to about 10% of the water height in the reservoir.

FIGURE 6.4
Impermeable upstream blanket

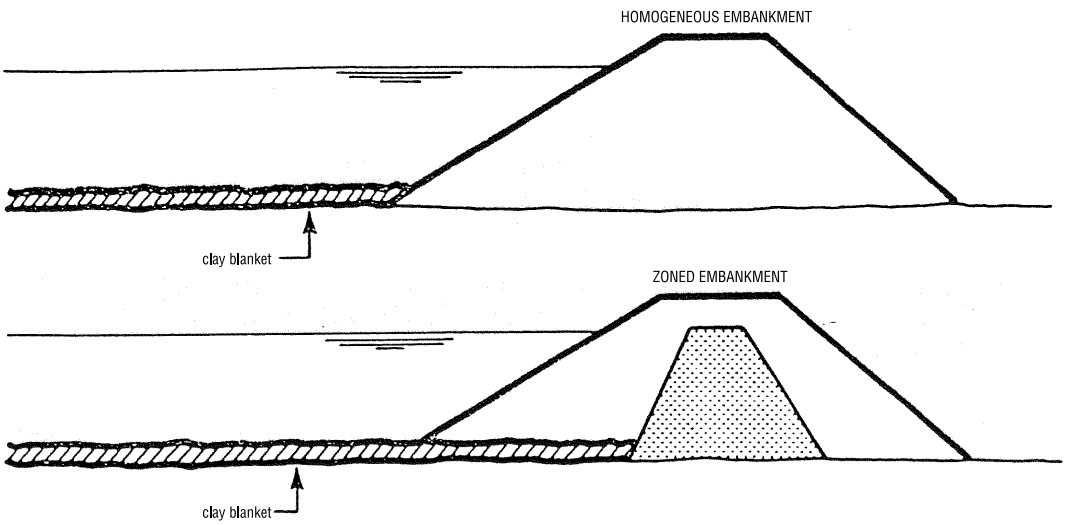

Geotextiles as filter layers and slope protection

Geotextiles can be used as *separators* to prevent mixing of one soil type with another. This is usually achieved by providing a barrier to migration of particles between two soils of differing grain-size while allowing free movement of water. An application in this respect may be use as a separator between a gabion or rock boulder scour protection layer and the underlying natural soil.

They can also be used in the downstream slope protection. This may be by acting as temporary protection for vegetation on steep slopes, and degrading as the vegetation develops and establishes itself. Alternatively, they may provide a more permanent key to allow the placement of a soil layer on the slope face into which vegetation can be planted.

The use of geotextiles in the applications above allows the re-use of local soils readily available at the site. Transport and material costs (with the exception of the geotextile itself) are therefore reduced.

It should be emphasised that geotextiles only improve the mass stability of a slope when they are used as part of a reinforced soil structure. When used as separators or in surface protection they have no influence on the mass stability of the slope and this must be separately considered and ensured if cost and effort inherent in their use is not to be wasted.

Materials

A wealth of proprietary brands of geotextiles are available and they can be classified on the basis of their material type and process of manufacture. They can be classified into two main types on the basis of their composition.

Natural Fibres

Natural fibres have the tendency to rot, particularly under moist conditions, and this biodegradability can be used to advantage when such materials are used as a temporary minor strengthening or protective measure until natural vegetation has grown to take over the role. The use of natural fibres is usually restricted to a bioengineering role, and they are almost never used as reinforcement unless no other alternatives are available.

Plastics

Plastics are increasingly used where the strength or function of the geotextile is required to be sustained over a long period. Synthetic geotextiles are manufactured from thermoplastics which can be softened and rehardened, making them an ideal base material from which to fabricate a range of products. Examples of thermoplastic polymers used in geotextiles are polyamide (nylon), polyester (terylene), polyvinyl chloride (PVC), polypropylene and polyethylene (PE).

The are generally formed into one of three basic component types:

- a continuous *filament*, of circular cross-section a fraction of a millimetre in diameter
- a continuous *flat tape*, a fraction of a millimetre thick and several millimetres wide
- a *sheet or film*, a fraction of a millimetre (film) to several millimetres (sheet) thick and several metres wide

The components are used to manufacture the finished geotextile product. Filaments may be used as single monofilaments, or in parallel aligned groups as multifilaments, or twisted into

yarn. Flat tapes may be used singly, or twisted into a tape yarn. Sheets may be punched and stretched to form grids exhibiting directional strength or strain resistant properties. These products tend to group into the following categories:

- conventional weaving using combinations of monofilament, multifilament, yarn, flat tape or tape yarn produces a variety of *woven geotextiles* in the form of sheets typically about one millimetre thick and displaying a mesh of reasonably single sized regular pore openings

- if monofilaments are cut into short lengths and then laid to form a loose layer of randomly orientated pieces they can be bonded by mechanical, thermal or chemical means to produce *non-woven geotextiles* in the form of sheets or three-dimensional mats of variable pore size.

- *geomeshes, geonets and geogrids* have large pore sizes in comparison to the dimensions of the material. Meshes and nets are formed by bonding two orthogonal sets of tapes while grids involve the punching out of holes in a sheet. If, after punching the holes, the sheet is extended at an elevated temperature in the main load-carrying direction this improves the strength and stiffness properties of the geogrid in this direction.

- *natural materials* can be used when artificially produced materials prove to be too expensive to purchase or transport. Examples of the use of natural materials are jute or coir matting, and woven bamboo panels.

Use in slope protection

The downstream slope of an earth dam without a protective vegetation cover is open to the scouring effects of wind and water, particularly if the exposed soil is sandy in composition or comprises a heavily weathered and fractured rock. Aesthetic remediation using vegetation is preferable to man-made protection but it can be extremely difficult for natural vegetation to re-establish itself. The use of geotextiles in conjunction with vegetation can provide early protection as the vegetation establishes itself.

Geomeshes, geomats or geomatrixes

Geomeshes (two-dimensional) and Geomats or Geomatrixes (three-dimensional) are used to interact with young seedlings by providing a stable surface through which seedlings can take root and grow to provide a vegetative ground cover.

Those made from natural fibres such as jute, coir and hemp are in the form of a mesh that allows the seedlings to be planted through it. They are biodegradable and their stabilising influence diminishes as the ability of the rooted vegetation to take over the protective role increases. Such biodegradable natural materials should only be used where slopes are stable in terms of mass stability and sufficiently shallow to ensure that the re-establishing vegetation will be secure in the long term.

Where slopes are stable in terms of mass stability but too steep to guarantee the long term security of a soil and vegetation cover synthetic geomats and geomeshes can contribute to the longer term protection of the soil surface and vegetation layer. Geomats are three-dimensional random open-knit structures with a thickness of up to 20mm (Figure 6.5). They are rolled out and pegged down onto the slope and then seeded and filled with topsoil, which is held in the mat.

The mat remains under the vegetation providing continuing reinforcement in the root zone. Many proprietary brands exist and the many derivatives include those with flat bases, or composites incorporating a reinforcing grid, or impregnated with stone and bitumen, or supplied complete with a pre-grown grass turf.

FIGURE 6.5
Geomat

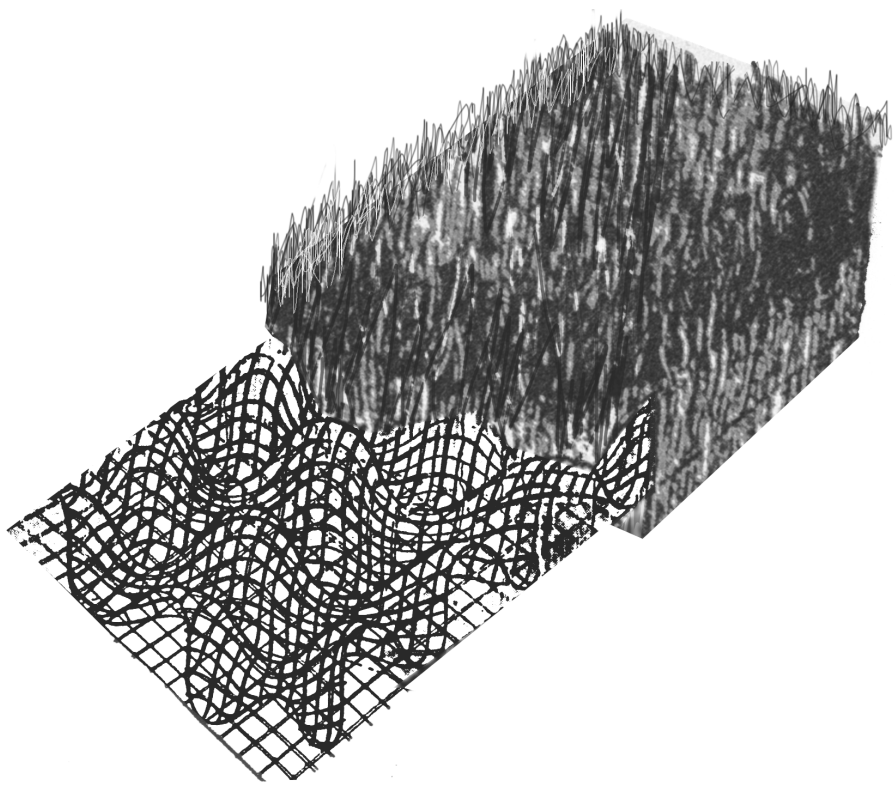

Before installation on the surface of the slope loose stony material should be removed.

The matting roll should be rolled out from the top of the slope (Figure 6.6) down to the base. The first roll should be at the downstream end of the slope. Leave a sufficient length at the top of the slope for anchoring.

To anchor, leave a margin of one metre from the crest and then dig a 250mm deep trench and fold the end of the length down into the trench and peg before backfilling and compacting the excavated soil. Anchor and peg the edge of the mat down the slope in the same way. Anchor the bottom end of the length in the same way at the base of the slope.

Lay out the next length from the top of the slope in the same way but provide a 0.5m overlap with the length already in place. Peg the matting at regular intervals across the full width and overlap.

Broadcast the seed before raking in the topsoil.

FIGURE 6.6
Laying geotextile roll material

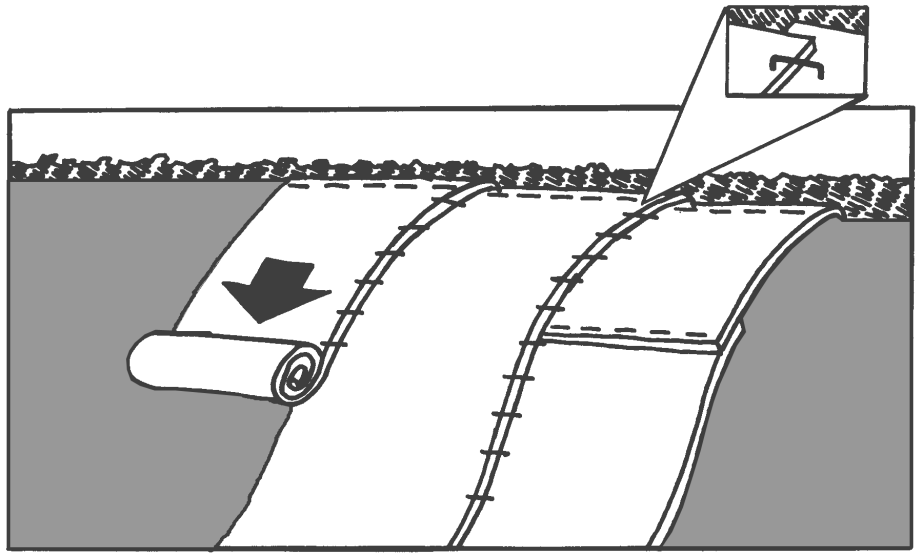

Geocells

An alternative in cases where slopes are so steep that soil is difficult to maintain in place and where, even if established, roots are not strong enough to adequately resist the downslope forces geocells can be used to retain the surface soil on the slope. Geocells are three-dimensional honeycomb structures (Figure 6.7) which provide a network of interconnected cells typically 150mm to 300mm square and from 75mm to 150mm high. The geocells are typically supplied in panels and each geocell panel is laid onto the slope surface and pegged in place at the top of the slope. Further pins are added on the slope surface and adjacent panels are stapled together. The cells are then filled with soil. It is important that hydraulic continuity is provided between cells so that run-off does not accumulate and saturate each cell thereby adding weight to the layer.

Figure 6.7
Geocell detail

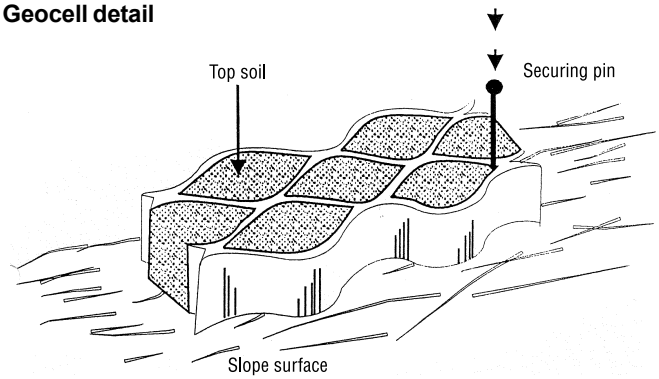

Use as separators

Another use of geotextiles is in providing a separation between materials that have a significant difference in particle size. This may be at the boundary of the newly placed controlled construction material and the underlying poorer quality *in-situ* material.

In earth dams common situations of this type occur when a gabion structure is placed against embankment fill or natural soil and a separator is required between the gabions and the soil. A separator between stone rip-rap or gabions and the protected natural soil holds back the finer-grained soil and prevents loss through piping and also permits free drainage

Important properties are resistance to puncture, tearing and ripping. Woven geotextiles and also non-woven geotextiles make good separators, and the important property is the pore size of the geotextile in relation to the grain size of the finer material.

Permeability of the geotextile

The permeability of the geotextile should be much higher than that of the soil to be protected. Partial clogging, which is likely to occur, should never reduce geotextile permeability below the threshold values:

$$K_{geotextile} > [5 \text{ to } 100]\ K_{soil}$$

For the geotextile to act as a hydraulic filter, generally in cohesive soils and in order to minimize the clogging phenomenon, the following value of permeability should be:

$$K_{geotextile} > 100\ K_{soil}$$

Soil retention

For important water flow through the geotextile, the voids should be as large as possible. Filtration concepts are well established in the design of soil filters, and the same principles are used to design adequate geotextile filters.

There are several design methods available. Each uses the concept of comparison between the soil grading and the “095 size” of the fabric as determined in the “apparent opening size” (AOS) test. The “095 size” is the diameter of the hole in the membrane of which 95% of the other holes are smaller. The simplest method uses the percentage of soil passing through the No 200 sieve (0.075mm).

- if less than 50% of soil is finer than 0.075mm, then the 095 size of the fabric should be greater than 0.59 mm
- if more than 50% of the soil is finer than 0.075mm, then the 095 size of the fabric should be less 0.297 mm
- 095 size of the fabric should be less than two to three times the D_{85} size of the soil where D_{85} is the particle size in mm at which 85% of the sample is finer.

Geotextile filters used in reversing flow conditions, such as under a wave-loaded rip-rap, must meet more severe requirements than those in stable hydraulic conditions. Under dynamic hydraulic loading, soil particles can be washed away or migrate down slope under the effect of fluctuating suction and flow.

Design criteria for geotextiles under reversing flow conditions are more severe than for static conditions:

for soil with $D_{50} > 0.06$mm: 090 size fabric/D_{90} soil< 1

or for soil with $D_{50} < 0.06$ mm: 090 size fabric/D_{50} soil< 1

Holtz (1988) proposed the following ratio for all geotextiles under either dynamic, pulsating or cyclic flow:

050 size fabric/D_{85} soil< 0.5

Slope stability

Nature of the problem

The design slopes of an embankment may vary widely, depending on the character of the materials available for the construction, the foundation conditions, the height of the structure and the pore-water pressure within the embankment. The latter is the most important factor and changes at various stages in construction and service. The most important of these are:

- During and immediately after construction (construction stage)
- After the reservoir has been full for long enough to establish steady seepage conditions (full-reservoir stage)
- During and immediately following the lowering of the reservoir (drawdown stage)

During the construction stage, critical pore water pressures can develop in the cohesive portions of the embankment and foundation soil. This is because the permeability of these materials is not sufficient to allow the pore water to drain immediately, and the pore pressure will only dissipate with time as consolidation occurs.

Once the dam has been completed for some time the dam experiences seepage pressures exerted by a steady flow of water from the reservoir through the embankment to the downstream toe. Flow nets would normally need to be generated to estimate the pore water pressures.

When the reservoir level is drawn down the pore water stays in the voids of the embankment soil and begins to seep towards the upstream face generating pore water pressures that can lead to failure of this slope.

Stability computations

In small earth dams detailed measurements or calculations are rarely possible and therefore simplifying assumptions have to be made about the worst probable conditions for stability. Stability computations should be carried out on this basis.

Bishop and Morgenstern method

A simplified method has been proposed by Bishop and Morgenstern (Bishop and Morgenstern, 1960) for evaluating the stability of earth dams by using tables giving stability coefficients. This method is applicable to homogeneous natural earth slopes or earth dam embankments and the

geometry relevant to the analysis is presented in Figure 6.8. The assumed critical failure circle is considered to be tangential to the base of the embankment, or to a hard stratum below the embankment. The parameters for use in the analysis are:

H Height of the embankment (m)
D Depth factor (-)
b Embankment slope angle (°)
r_u Pore pressure ratio
c' Effective cohesion of the soil (kN/m^2)
φ' Effective angle of shearing resistance of the soil (°)
γ Unit weight of soil (kN/m^3)

The height of the slope is H and D · H is the depth of the first hard stratum below the crest, D being the "depth factor". Therefore, if an earth dam is founded directly on rock the depth factor would be 1. The slope angle is b and the slope is usually expressed as cot b = H/V, ie. 2:1, 3:1, etc.

The pore pressure ratio, r_u, at any point is expressed as:

$$r_u = H_w \cdot \gamma_w / H.g$$

Because the unit weight of water is approximately half the unit weight of soil the r_u of a saturated slope will be 0.5 and for a dry slope r_u will be 0. In this simple analysis it is assumed that the pore pressure ratio is constant throughout the slope section. In practice the choice of pore pressure ratio needs some expertise. In the extreme case of a sudden escape of water from the reservoir and a rapid and total draw-down an appropriate r_u would be 0.5. In normal controlled draw-down conditions an appropriate value of r_u would be about 0.3.

The soil variables are the shear strength parameters, the effective cohesion c' and effective angle of shearing resistance φ', and the unit weight of the soil g. These have to be measured by laboratory tests, or assumed from simple index tests. For initial analyses the typical soil parameters given in Table 6.1 can be assumed.

FIGURE 6.8
Parameters for analysis of slope stability

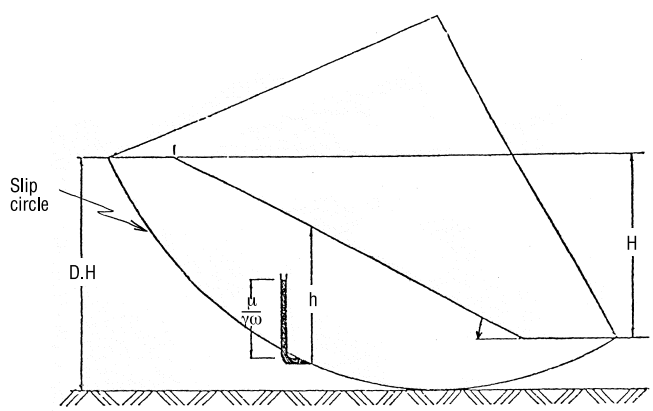

For the normal range of the above parameters experienced in practice the safety factor F is obtained from the following equation:

$$F = M - r_u N$$

where:
M and **N** are stability coefficients given by Table 6.2.

TABLE 6.1
Typical soil parameters

Material	Effective Cohesion (c') (kN/m^2)	Effective Angle of Shearing Resistance (f) (degrees)		
Cohesionless soils		Loose		Dense
Sand, single sized round grains	0	28		34
Sand, well graded angular grains	0	33		45
Sandy gravel	0	35		48
Silty sand	0	27		30
Inorganic silt	0	27		30
Cohesive soils		PI = 100	PI = 50	PI = 25
Clay	3	21	25	30

TABLE 6.2
Stability coefficients (Bishop and Morgenstern, 1960)

M and N for c'/H g= 0

φ'	Slope = 2:1		Slope = 3:1		Slope = 4:1		Slope = 5:1	
degrees	M	N	M	N	M	N	M	N
10.0	0.353	0.441	0.529	0.588	0.705	0.749	0.882	0.917
12.5	0.443	0.554	0.665	0.739	0.887	0.943	1.109	1.153
15.0	0.536	0.670	0.804	0.893	1.072	1.139	1.340	1.393
17.5	0.631	0.789	0.946	1.051	1.261	1.340	1.577	1.639
20.0	0.728	0.910	1.092	1.213	1.456	1.547	1.820	1.892
22.5	0.828	1.035	1.243	1.381	1.657	1.761	2.071	2.153
25.0	0.933	1.166	1.399	1.554	1.865	1.982	2.332	2.424
27.5	1.041	1.301	1.562	1.736	2.082	2.213	2.603	2.706
30.0	1.155	1.444	1.732	1.924	2.309	2.454	2.887	3.001
32.5	1.274	1.593	1.911	2.123	2.548	2.708	3.185	3.311
35.0	1.400	1.750	2.101	2.334	2.801	2.977	3.501	3.639
37.5	1.535	1.919	2.302	2.558	3.069	3.261	3.837	3.989
40.0	1.678	2.098	2.517	2.797	3.356	3.566	4.196	4.362

M and N for c'/H g= 0.025 and D = 1.00

φ'	Slope = 2:1		Slope = 3:1		Slope = 4:1		Slope = 5:1	
degrees	M	N	M	N	M	N	M	N
10.0	0.678	0.534	0.906	0.683	1.130	0.846	1.365	1.031
12.5	0.790	0.655	1.066	0.849	1.337	1.061	1.620	1.282
15.0	0.901	0.776	1.224	1.014	1.544	1.273	1.868	1.534
17.5	1.012	0.898	1.380	1.179	1.751	1.485	2.121	1.789
20.0	1.124	1.022	1.542	1.347	1.962	1.698	2.380	2.050
22.5	1.239	1.150	1.705	1.518	2.177	1.916	2.646	2.317
25.0	1.356	1.282	1.875	1.696	2.400	2.141	2.921	2.596
27.5	1.478	1.421	2.050	1.882	2.631	2.375	3.207	2.886
30.0	1.606	1.567	2.235	2.078	2.873	2.622	3.508	3.191
32.5	1.739	1.721	2.431	2.285	3.127	2.883	3.823	3.511
35.0	1.880	1.885	2.635	2.535	3.396	3.160	4.156	3.849
37.5	2.030	2.060	2.855	2.741	3.681	3.458	4.510	4.209
40.0	2.190	2.247	3.090	2.993	3.984	3.778	4.885	4.592

M and N for c'/H g= 0.025 and D = 1.25

φ'	Slope = 2:1		Slope = 3:1		Slope = 4:1		Slope = 5:1	
degrees	M	N	M	N	M	N	M	N
10.0	0.737	0.614	0.901	0.726	1.085	0.867	1.285	1.014
12.5	0.878	0.759	1.076	0.908	1.299	1.089	1.543	1.278
15.0	1.019	0.907	1.253	1.093	1.515	1.312	1.803	1.545
17.5	1.162	1.059	1.433	1.282	1.736	1.541	2.065	1.814
20.0	1.309	1.216	1.618	1.478	1.961	1.775	2.334	2.090
22.5	1.461	1.379	1.808	1.680	2.194	2.017	2.610	2.373
25.0	1.619	1.547	2.007	1.891	2.437	2.269	2.897	2.669
27.5	1.783	1.728	2.213	2.111	2.689	2.531	3.196	2.976
30.0	1.956	1.915	2.431	2.342	2.953	2.806	3.511	3.299
32.5	2.139	2.112	2.659	2.585	3.231	3.095	3.841	3.638
35.0	2.331	2.321	2.901	2.841	3.524	3.400	4.191	3.998
37.5	2.536	2.541	3.158	3.112	3.835	3.723	4.563	4.379
40.0	2.753	2.775	3.431	3.399	4.164	4.064	4.958	4.784

M and N for c'/H g= 0.05 and D = 1.00

φ'	Slope = 2:1		Slope = 3:1		Slope = 4:1		Slope = 5:1	
degrees	M	N	M	N	M	N	M	N
10.0	0.913	0.563	1.181	0.717	1.469	0.910	1.733	1.069
12.5	1.030	0.690	1.343	0.878	1.683	1.136	1.995	1.316
15.0	1.145	0.816	1.506	1.043	1.904	1.353	2.256	1.567
17.5	1.262	0.942	1.671	1.212	2.117	1.565	2.517	1.825
20.0	1.380	1.071	1.840	1.387	2.333	1.776	2.783	2.091
22.5	1.500	1.202	2.014	1.568	2.551	1.989	3.055	2.365
25.0	1.624	1.333	2.193	1.757	2.778	2.211	3.336	2.651
27.5	1.753	1.480	2.380	1.952	3.013	2.444	3.628	2.948
30.0	1.888	1.630	2.574	2.157	3.261	2.693	3.934	3.259
32.5	2.029	1.789	2.777	2.370	3.523	2.961	4.256	3.585
35.0	2.178	1.958	2.990	2.592	3.803	3.253	4.597	3.927
37.5	2.336	2.138	3.215	2.826	4.103	3.574	4.959	4.288
40.0	2.505	2.332	3.451	3.071	4.425	3.926	5.344	4.668

M and N for c'/H g= 0.05 and D = 1.25

φ'	Slope = 2:1		Slope = 3:1		Slope = 4:1		Slope = 5:1	
degrees	M	N	M	N	M	N	M	N
10.0	0.919	0.633	1.119	0.766	1.344	0.886	1.594	1.042
12.5	1.065	0.792	1.294	0.941	1.563	1.112	1.850	1.300
15.0	1.211	0.950	1.471	1.119	1.782	1.338	2.109	1.562
17.5	1.359	1.108	1.650	1.303	2.004	1.567	2.373	1.831
20.0	1.509	1.266	1.834	1.493	2.230	1.799	2.643	2.107
22.5	1.663	1.428	2.024	1.690	2.463	2.038	2.921	2.392
25.0	1.822	1.595	2.222	1.897	2.705	2.287	3.211	2.690
27.5	1.988	1.769	2.428	2.113	2.957	2.546	3.513	2.999
30.0	2.161	1.950	2.645	2.342	3.221	2.819	3.829	3.324
32.5	2.343	2.141	2.873	2.583	3.500	3.107	4.161	3.665
35.0	2.535	2.344	3.114	2.839	3.795	3.413	4.511	4.025
37.5	2.738	2.560	3.370	3.111	4.109	3.740	4.881	4.405
40.0	2.953	2.791	3.642	3.400	4.442	4.090	5.273	4.806

M and N for c'/H g= 0.05 and D = 1.50

φ'	Slope = 2:1		Slope = 3:1		Slope = 4:1		Slope = 5:1	
degrees	M	N	M	N	M	N	M	N
10.0	1.022	0.751	1.170	0.828	1.343	0.974	1.547	1.108
12.5	1.202	936.000	1.376	1.043	1.589	1.227	1.829	1.399
15.0	1.383	1.122	1.583	1.260	1.835	1.480	2.112	1.690
17.5	1.565	1.309	1.795	1.480	2.084	1.734	2.398	1.983
20.0	1.752	1.501	2.011	1.705	2.337	1.993	2.690	2.280
22.5	1.943	1.689	2.234	1.937	2.597	2.258	2.990	2.585
25.0	2.143	1.903	2.467	2.179	2.867	2.534	3.302	2.902
27.5	2.350	2.117	2.709	2.431	3.148	2.820	3.626	3.231
30.0	2.568	2.342	2.964	2.696	3.443	3.120	3.967	3.577
32.5	2.789	2.580	3.232	2.975	3.753	3.346	4.326	3.940
35.0	3.041	2.832	3.515	3.269	4.082	3.771	4.707	4.325
37.5	3.299	3.102	3.817	3.583	4.431	4.128	5.112	4.735
40.0	3.574	3.389	4.136	3.915	4.803	4.507	5.543	5.171

The tables provide values of the stability coefficients, M and N, for three values of c'/H.g, namely 0, 0.25 and 0.5 which cover most situations. In the tables, M and N can be read off for particular values of c'/H.g, and for the appropriate angle of shearing resistance and slope angle.

The tables can be used in the case of rapid drawdown with the water level dropping from the top to the bottom of the dam, in assuming $r_u = 0.5$ and also in the case of total stress analysis by assuming $r_u = 0$. The tables involve a homogeneous embankment with unique cohesion and angle of internal friction.

The procedure involves:

- Measure or assume the applicable parameters for the embankment in question
- Determine the value of c'/H.g. If it falls between the three values to which the tables apply determine M and N twice and perform a linear interpolation.
- For the relevant slope angle and angle of shearing resistance read off M and N.
- Insert the values in the above equation and compute the factor of safety.

Example of slope stability analysis

An earth dam provides the following parameters for the stability analysis of the upstream slope:

Height	H = 10m
Slope	b = 18 degrees
Therefore,	cotg b = 3:1
Depth factor	D = 1
Cohesion	c' = 3 kN/m^2
Angle of shearing resistance	φ' = 25 degree
Unit weight	g = 18 kN/m^3
Let,	
Pore pressure ratio	$r_u = 0.3$

Therefore, the first step in carrying out the analysis is to calculate:

$$c'/H.g = 3/18*10 = 0.017$$

Referring to Table 6.2 for c'/H.g = 0, a slope of 3:1, and an angle of shearing resistance of 25 degrees then:

M = 1.399
N = 1.554

Referring to Table 6.2 for c'/H.g = 0.025, depth factor = 1, a slope of 3:1, and an angle of shearing resistance of 25 degrees then:

M = 1.875
N = 1.696

Therefore, for c'/H.g = 0.017, depth factor = 1, a slope of 3:1, and an angle of shearing resistance of 25 degrees then both M and N have to be interpolated and:

M = [17/25 x (1.875 - 1.399)] + 1.399 = **1.722**
N = [17/25 x (1.696 - 1.544)] + 1.554 = **1.657**

Therefore, the factor of safety for r_u = 0.3 is:

F = M - r_u N
= 1.722 - (0.3 x 1.657)
= **1.22**

Since a satisfactory factor of safety should be at least 1.3 the above slope design would require slight modification until the calculated Factor of Safety reached the required level.

Chapter 7

Construction and quality control of earth and gabion materials

The small dams considered in this publication are characterized both by their limited dimensions - a maximum height of about 8 to 10 m and a maximum length of several hundreds of metres - and by the fact that the works could be constructed manually by a large number of unskilled labourers (usually local farmers). However, these conditions do not allow for permissive controls. On the contrary simple but rigorous quality control procedures are necessary, covering all essential elements and activities during construction covered by a well-defined inspection programme.

Although the structure may be well-designed its useful life could be significantly reduced if it is poorly constructed. Many features need careful control during the construction phase, for example the selection of materials, the moisture content of the earthfill, the compaction process, the stone size in gabions. The main construction procedures for building up embankments and gabion structures are described, including issues such as:

- organisation of the project site;
- site preparation;
- mobilization of the resources required for carrying out the envisaged works;
- production of a work plan;
- methods for the working of borrow areas;
- detailed procedures for gabion manufacture;
- procedures for the construction of cut-off walls.

Project planning

Resources required

The procurement of resources necessary for the building of hydraulic structures should readily be considered during the feasibility phase of the design studies. Especially in developing countries the quality and the quantity of locally available materials and the availability of a labour force should first be assessed. Four main categories of resource are necessary:

- local construction materials for earthworks (sand, gravel, stones and water)
- labour (skilled and non-skilled workers)
- mechanical equipment (excavation, compaction and dump trucks)
- adequate financing including contingencies.

Materials requirements obviously depend on the type of hydraulic structure. For example, an embankment will require suitable earth or rock fill and a local supply of water, a gabion weir will require a local source of suitable stone, etc.

Skilled workers are needed for gabion construction and for operating construction equipment. Technical support from local engineers or technicians is also be necessary in order to carry out the topographic survey of the site and to conduct training workshops.

The type and the quantity of mechanical equipment to be used depends largely on availability and the structure type and dimensions. The following items are useful:

- bulldozer for the site preparation (e.g.. surface scraping, preparing access roads and borrow area);
- excavator for the excavation of foundations;
- loaders and dump trucks to load and carry earth and rubble from borrow area to the site;
- motorised rollers and water tanks for embankment compacting;
- a grader for haul road maintenance and also for spreading and levelling earth layers discharged by trucks;
- a towed roller , disks and harrows.

While the above compliment of machinery is ideal, for small rural dams the variety and the amount of mechanical equipment is often very limited. In this case, it is advantageous to use versatile machines such as excavators or back hoe-loaders. Very small dams can be entirely built by hand if construction materials (e.g.. rubble and suitable earth) can be found in proximity to the site and a sufficient number of unskilled labourers are locally available.

Financing must be organised to buy the construction materials required, such as gabion wire, cement and steel bars for concrete reinforcement. Funds must also be available to finance the various project running costs (e.g.. staff salaries, purchase of spare parts, fuel and lubricants for mechanical equipment).

The first task in project planning should be to list, by category, the resources required for each of the construction phases detailed in the dam design. Checks should be made to identify whether resources are readily available, to ascertain if the same conditions assumed in the design have changed and to confirm the adequacy of the preliminary investigations.

Work plan

A detailed work plan should take into account all construction phases including the interactions between the different tasks. It is necessary to compile reliable estimates for each of the scheduled activities (e.g.. construction of the earthfill embankment, building of gabions, etc.) in terms of both time and the resources necessary for the accomplishment of each activity. These estimates depend on a number of factors, e.g.:

- the distance between the borrow area and the dumping point;
- the number and capacity of loaders and dump trucks used for earth transport;
- the number of tank trucks used as water bowsers;
- the distance between the water point and the embankment site;
- the number of rollers and other machines for spreading, mixing, levelling and compacting earthfill.

Actual progress should be closely monitored during construction and checked against the work plan. When significant deviations are noted, the reasons should be evaluated and the entire programme revised. Problems encountered during construction (e.g. foundation excavation greater than estimated, mechanical problems with the equipment, etc.) may also require modifications to the original work plan.

Work site organization

The organisation of the work site should be developed in an efficient manner. Areas must be located in proximity of the structure where subsidiary activities can take place, for example, turning space for earth-moving equipment. An area for concrete mixing, with storage for cement, gravel and sand, has to be set up close to the structure. A zone for storing other construction materials, such as gabion baskets, wire, stones, pipes, etc., has to be prepared. Storage and parking areas must be sheltered against rainfall and sun.

A borrow area sited within the upstream catchment should be strictly supervised as runoff may carry away loose material excavated for the earthworks into the impoundment.

The work progress should be monitored on a daily basis (e.g.. number of trips made by dump and tank trucks to the earthfill, number of gabions installed, quantity of fuel consumed by machines and trucks, hours worked by machines and trucks). All these data will prove useful for evaluating the project efficiency and the actual cost of the project and to establish the construction history for each structure. Accurate construction records are the key to understanding the causes of structural breakdowns that may arise after project completion.

The main data to be recorded should be:

- construction start and completion dates;
- characteristics of the foundation soils (e.g. depth, thickness and material constituting each layer);
- main problems encountered during construction;
- all results of the trial tests.

Earthworks

Site preparation

The first step when constructing a small dam is to set out its footprint on the ground. The site of each component of the structure (e.g.. embankment, spillway, drains, etc.) should be marked with pegs according to the design drawings with topographical methods. The embankment footprint and the longitudinal axis should be pegged (see figure 7.1). The surveyors should place pegs setting out cross-sections at least every 50 m along the dam axis.

Calculations of the actual embankment construction volume should be made by calculating each surveyed cross-sectional area, with the ground levels surveyed both before the start of construction and then when the final profile of the material has been completed.

FIGURE 7.1
Pegging out the embankment footprint

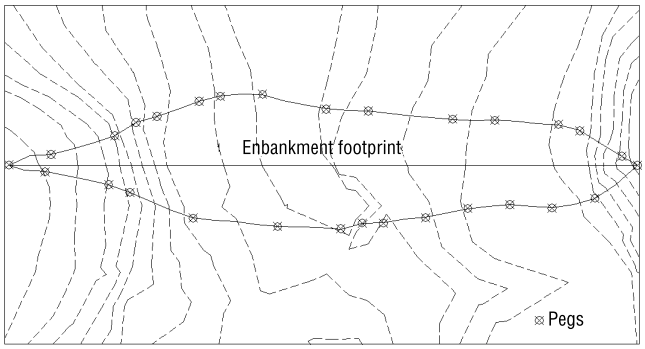

Service roads

Service roads should connect all the areas within the work site where construction activities will take place. For example, the embankment must be connected with the borrow area, the spillway with the stone quarry and the whole work site to the existing road network of the region. When designing haul roads, safety should receive primary attention. For example, it may be preferable to build two separate one-way roads to reduce the risk of collision caused by poor visibility caused by dust clouds. When the embankment is being built, access roads at lower levels will become unfit as the earthfill is progressively raised. Therefore, several levels of access roads should be built in advance in order to guarantee continuous access and avoid work interruptions. Haul roads should be adequately dimensioned in order to support the heavy load of large trucks and should be continuously maintained in good condition possibly with a grader. Regular watering of the haul roads may also be necessary to prevent the formation of dust clouds.

Diversion structures

In climates where rainfall is seasonal, runoff events may have a detrimental effect on the work already done. The construction of a diversion structure should be an essential safety feature for the project. It should be dimensioned according to flow forecasts made on the basis of the local hydrological characteristics. The type of diversion structure to be selected depends on the design of the structure. For example, for a dam traversed by a pipe, it could be built early in the work programme so as to serve as a temporary diversion structure (see Plate 7.1).

PLATE 7.1
Runoff passing through pipeline inserted in the earthfill during embankment construction

Borrow areas

The borrow areas selected for the provision of earthfill material for the embankment construction, have first to be cleaned from organic debris (e.g. roots, topsoil, shrubs, etc.) by initial scraping of the area. Sometimes it is also be necessary to remove the shallow surface layer because the high content of organic matter may render it unsuitable for earthfill supply.

The borrow-area has to be properly levelled if scrapers are used for the transportation of earth material. If excavation is particularly difficult, a bulldozer can be an essential support for scrapers in loosening the soil in place. Instead, if trucks are used, then the earth may have to be crushed, moved from its original location and stockpiled by bulldozers. Then it is loaded into the trucks by a loader (see Plate 7.2).

PLATE 7.2
Borrow area working

Surface stripping

The surface layer in the embankment footprint has also to be removed, because it generally contains organic material (topsoil and vegetation) which otherwise could later develop a preferential path for water seepage. Large stones should also be removed. All cavities, depressions, soft spots and other irregularities must be filled with embankment materials and compacted to the same specification as the overlying embankment earthfill. Before starting to construct the embankment, it is necessary to loosen and scarify the upper 50 cm of foundation soil, water it and re-compact in order to assure a tight bond between the natural soil and the new earthfill.

Surface scraping is generally done with bulldozers. They push the material to be removed downstream, out of the embankment footprint. However, if the distance to cover is long or the quantity of material is considerable, it may be more convenient to remove this material with dump trucks.

In addition, to ensure good compaction at the edges of the earthfill, a benched or stepped profile should be prepared in the side slope of the valley. Typically each step should not exceed a height of twice the compacted layer thickness in the earthfill (about 30 to 40 cm).

Cutoff trench

Excavators would generally dig the cutoff trench of the embankment down to a maximum depth of about 4 m to 6 m. The foundation trench should be a minimum of some 4 m wide to allow access to machinery and trucks. Access ramps should also be prepared for trucks and machinery to access the trench for laying, leveling and compacting the earthfill. During the excavation, the material would be deposited downstream of the trench. Later, this material can be carried away from the embankment footprint by bulldozers or trucks.

The surface soil in the trench also requires scarifying, watering and re-compaction in order to create a perfect bond between the natural soil and the earthfill. Finally the base of the trench should be carefully cleaned before starting the earthfill construction.

Embankment construction

Suitability of material for earthfill

The types of soil considered suitable for use as earthfill must be indicated in the design specifications. Organic or peaty soils containing more than about 5% organic material should not be used. Clay soils that are too wet should be avoided since they are difficult to compact to an acceptable density and will not be easy to dry out.

In order to obtain a reasonable compacted density and an impervious earthfill, an embankment dam constructed with one homogenous soil type requires the following soil characteristics:

- percentage of fines (<0.075 mm) >25%
- liquid limit (LL) <50%
- plasticity index (PI) >8%

If materials with the required fines content are not available , it will be necessary to design a zoned dam and use this material only for the supporting shoulders but utilizing an impervious core or a lining (Chapter 1).

Soil compaction

The increase in soil dry density caused by compaction is dependent on both the actual moisture content of the soil and the amount of compactive effort. For each soil, for a given compactive effort, there is an optimum moisture content at which a maximum dry density can be achieved (Figure 7.2).

FIGURE 7.2
Relationship between dry density and moisture content for a constant compactive effort

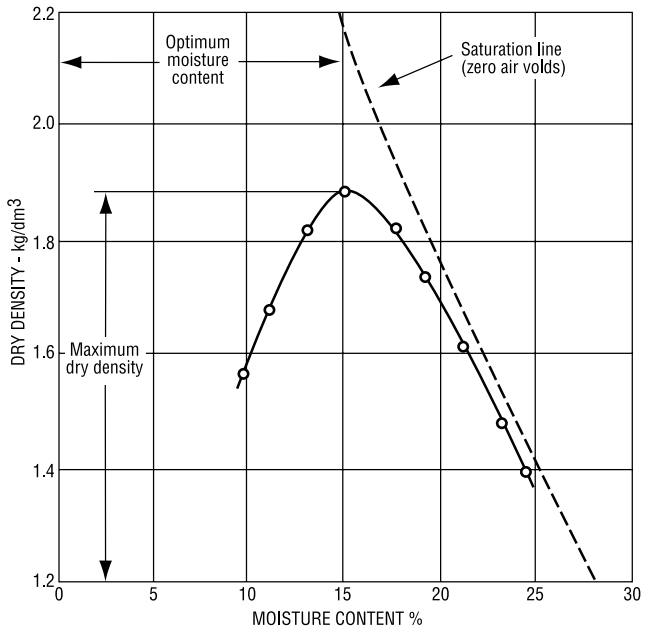

As the compactive effort is increased for a given moisture content the soil particles are packed closer together until the remaining air voids are so small that no further decrease in volume can be achieved. Typically this is at an air voids content of between about 5 and 10%.

The moisture content has the following effect. At a low moisture content the dry soil is stiff and difficult to compact. When the moisture content is increased the water softens the soil and makes it more workable, helping to decrease the volume of air voids, and increase the density. However, once the air voids have been minimized any additional water only serves to increase the total void volume and the density decreases again. The water content at the point of maximum dry density is the optimum water content.

The maximum dry density that can be achieved for any soil depends on its type and varies from about 1600 kg/m^3 for a heavy plastic clay to about 2200 kg/m^3 for a well-graded gravel. The optimum moisture content ranges from about 5% for coarse-grained (gravely) soils to about 25% for heavy clays. Some typical compaction curves are given in Figure 7.3. In general terms a flattish curve represents a single sized material and a curve with a pronounced peak represents a well-graded material.

FIGURE 7.3
Relationship between dry density and moisture content for a range of soil types

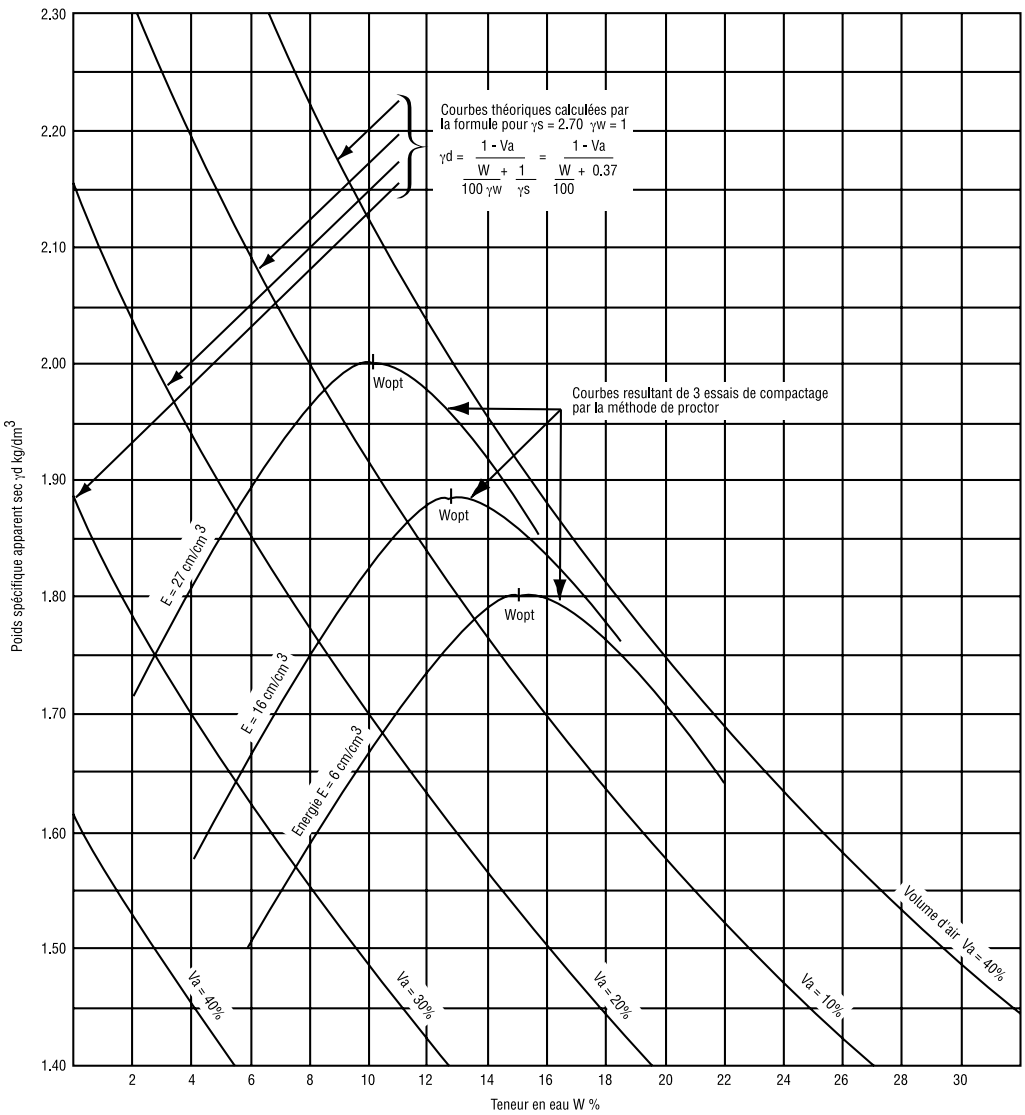

The determination of the optimum dry density/moisture content relationship is carried out in the laboratory by means of the Proctor or modified Proctor compaction test. The soil is air-dried and passed through a 20 mm sieve to remove the larger particles. It is then mixed with a small amount of water and compacted into a standard test cylinder in three equal layers. Each layer is

compacted by a standard number of blows of a standard hammer weight falling through a standard distance. The density of the compacted specimen is determined and a moisture content determination is made on a sample taken from the mould. This procedure is repeated at increasing moisture contents and a curve is plotted of dry density against moisture content so that the maximum dry density and optimum moisture content can be determined.

The difference between the Proctor or modified Proctor test concerns the relative compactive effort, the choice depending on the compaction plant available for construction. The simple Proctor test would be applicable for manual methods while the modified Proctor test would be applicable to methods of construction using heavier construction equipment.

Placement of soil layers for compaction

The earthfill is carried to the dumping area by dump trucks. Bulldozers or graders spread the earth discharged by the trucks into a layer not thicker than 15 to 25 cm. If scrapers are used on larger projects they combine the transporting, spreading and leveling operations.

During soil spreading, it is important to avoid segregation of earth particles into lumps of the same grain size. This phenomenon can be dangerous because it creates zones of high permeability. It is often the case when constructing small embankments, that material is not selected with enough care during the preparation of the borrow-area. It is possible also that oversize rocks or an excessive quantity of gravel or rubble material will be carried to the embankment by trucks. These materials have to be removed before compaction starts. It is useful to deploy some labourers on the embankment in order to remove oversize rocks and other unacceptable materials (e.g. roots, rubble and vegetation). (See Plate 7.3). The technician overseeing the works should regularly verify the dimensions of the earthfill (e.g. level, layer thickness and width) with an automatic level and band chain.

PLATE 7.3
Fill spreading

Watering

In watering the fill, one should aim at achieving the optimum moisture content, previously determined with the Proctor compaction test. There are two alternative procedures to correct the moisture content of the borrow material. The first consists in sprinkling water onto the soil in the borrow area, before the bulldozers do the earthworks. The second consists in sprinkling the fill with water once it has been spread and leveled. In this case the fill has to be scarified and mixed (with discs and harrows) before, during and after sprinkling so that the moisture content is uniformly distributed throughout the layer before compaction. While the first procedure to correct the moisture content in the fill normally ensures greater moisture homogeneity, it is not always suitable for arid and semi-arid regions. In these zones, the material moisture can be substantially reduced during

transportation from the borrow area to the area of embankment construction. The first procedure also has the disadvantage that machinery and trucks have to load, transport and lay wet earthfill which is heavier and consequently more difficult to work with.

Compaction

When one earth layer is leveled and the fill has been mixed to the right moisture content, compaction starts with an appropriate method. Several methods of field compaction can be used depending on the availability of manual labour and/or machinery and its type. It also depends on the compaction characteristics of the soil which should have been classified and subjected to compaction testing before the appropriate method of compaction is determined.

There are four main kinds of roller machines:

- pneumatic tyre rollers
- tamping rollers
- sheepsfoot rollers
- vibrating rollers

The selection of the proper roller depends upon the characteristics of the borrow material and its grain size. Sheepsfoot rollers are suitable for high clay content. Otherwise, tamping rollers are more effective. Both are generally towed by a tractor. Vibrating rollers can be used on all kinds of fill (see Plate 7.4), but are particularly effective on granular fills. They tend to be more expensive than sheepsfoot and tamping rollers. Pneumatic tyre rollers are preferable for soil consolidation. The embankment design will normally specify how many passes the roller should do to achieve good compaction of the layer.

There are also two kinds of small manually operated machines, frog rammers and vibrating plates, used for compacting narrow areas, or concrete or gabion structures, where roller machines cannot work (see Plate 7.5).

On smaller projects where manual compaction is necessary the following procedures may be adopted. Predominantly granular soils have little cohesion, particularly when saturated or almost saturated. When they are hand extracted, the result is a structureless, loose material. This material is easy to spread in uniformly thick layers of about 20 cm and to compact using hand compactors. Each layer of this material on the embankment would be compacted by a certain number of blows using a manual compactor (Figure 7.4), as determined by a trial embankment.

PLATE 7.4
Vibrating roller

PLATE 7.5
Frog rammer

FIGURE 7.4
Site-made manual compactor

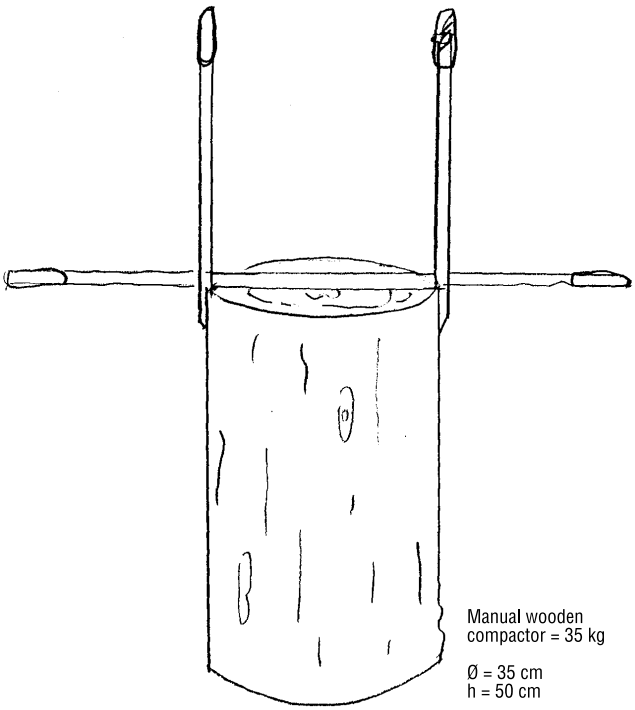

Predominantly cohesive soils (e.g. characterized by silty or sandy clay of low to medium plasticity, USCS soil group CL-CM) are difficult to compact manually. These clay soils should be cut into regular lumps using a sharp shovel (an alternative is a simple tool consisting of an iron wire kept taut by a wooden bow, the same technique as used in geotechnical laboratories to cut clay samples). The clay lumps are then transported to the dam site from the quarry. Generally the individual clay lumps will have an acceptable density but it is difficult to achieve the same natural density by means of compaction because voids will occur between the lumps and considerable effort is required to reduce these voids. A practical procedure in this situation is to place the lumps in approximately horizontal layers in a regular pattern, minimizing the voids between them, and then to fill the intervening voids with smaller clay lumps and finish by smoothing the contact surface.

Estimation of manual compaction resources

Compaction is the result of the mechanical energy transmitted to the soil manually, using a rudimentary wood or metal hammer generally handled by two workers. For the purpose of estimating the number of hammers and men required the following procedure may be used.

In order to estimate the energy discharged into the soil, some calculation is necessary. Knowing the hammer weight and dimensions, the height and the number of strokes, and the thickness of the layer to be compacted, then the energy of compaction, E_c (kJ/m^3) applied to a layer initially 0.15 m thick can be found using:

$$E_c = \frac{10WxHxLxB}{(lxbxt)x1000}$$

where: **W** = weight of the hammer (kg)
H = height of fall of the hammer (m)
L = number of layers (usually = 1)
B = number of blows applied
l = length of sample area (m)
b = breadth of sample area (m)
t = thickness of sample after compaction (m)

Thus, a 35 kg hammer falling from 0.50 m for 12 blows onto a single layer 0.15 m thick before compaction, with a surface area 0.20 m by 0.20 m and a thickness after compaction of 0.10 m, would transfer

$$E_c = \frac{(10x35)x0.50x1x12}{(0.20x0.20x0.10)x1000} = 525kj/m^3$$

In practice, this is similar to the energy of the standard laboratory Proctor compaction test (594.8 kJ/m^3). An indicative number of blows for the hammer managed by two men considered in the example would be in the order of 300 blows/m^2. If the use of other sizes of hammer is preferable, such as single-person hammers, then the number of blows changes in proportion of the weight, so that if it is decided to use a single person's metal hammer of 10 kg, then the number of blows/m^2 will be 3.5 times the number of blows needed from a 35 kg hammer.

The equation above can be altered in order to estimate the work force necessary for earthfill compaction. For example, with 4 workers per 35-kg hammer, then assuming 1 blow every 1.5 seconds and the need for 300 blows/m^2, in 8 hours (1 work-day) it is possible to compact approximately 36 m^2, corresponding to 384 m^2 per week (6 days) per hammer. In order to produce 1000 m^3/week of compacted earthfill, it will be necessary to mobilize approximately 70 workers with 17 hammers, and they will be between 15 and 20% of the total workforce.

Bonding between soil layers

Due attention should be paid to achieving a perfect bonding between two succeeding layers, especially if vibrating rollers are being used for the compacting. In this case, the surface of the layer will tend to be very smooth, and it will be necessary to scarify it with discs to obtain a good bonding with the overlying layer (see Plate 7.6). If the lower layer is too dry, watering of the surface is also necessary to improve the bonding between the two layers.

Sometimes, for better utilization of machinery, the earthfill can be divided into two portions. For example, trucks carry the fill to one earthfill area, while machinery is preparing and compacting material previously transported to the other area. In this case the line separating the two portions of earthfill should be parallel to the embankment axis (see Plate 7.7). The surface of the lower layer should be scarified thoroughly before starting to build the adjacent one. The division between parts of the same layer should be varied in location from layer to layer.

PLATE 7.6
Scarifying the top of a layer

PLATE 7.7
Division of layer into two zones

Construction of vertical and horizontal drains

Sometimes drains, comprising graded granular material have to be inserted in the embankment to control water seepage pressures in the earthfill. In small embankments trench drains are normally used. When these drains do not have to be particularly large or deep, the most suitable method to construct them is as follows:

- build the earthfill up to the upper level of the drain,
- dig the drain trench with an excavator,
- fill the trench with the graded granular drainage material.

It is useful to mark the lower exit of each drain on the downstream shoulder of the embankment.

Insertion of water pipes

Pipes inserted in the embankment must be placed directly on natural soil to minimize the risk of settlement. In fact, if the pipe were placed on the earthfill, a differential settlement of the earthfill could give rise to separation of pipe elements and subsequent leakage. Some cut-off collars (at least two) have to be constructed around the pipe to lengthen, and thereby retard, the infiltration path and to minimize the risk of any significant seepage. It is particularly necessary to ensure that the fill is properly compacted around the pipe (see Plate 7.8).

Each pipe should be installed in a trench dug purposely into natural soil. The trench should be wide enough to contain the pipe and a layer of earthfill surrounding it. Methods for pipe placement depend largely on the pipe size and material. Plastic pipes can be installed manually and are more flexible and able to withstand differential movement. Cranes or excavators, which will generally be available locally, are used for installing steel and reinforced concrete pipes (see Plate 7.9). Particular care should be exercised into joining the pipe elements, because leaks from the pipe can promote significant seepage, which can be very dangerous for the embankment's overall safety.

Supervision and control of compaction

During field compaction the two variables are the moisture content and the compacted density. These, therefore, need to be monitored and controlled during the construction. There are two main methods of control and these consist in either specifying a method for the compaction (method specification) or specifying a dry density and moisture

PLATE 7.8
Preparation of cut-off collars

PLATE 7.9
Placement of pipe units in a small dam


a


b


c


d

content that must be achieved (performance specification).

The method specification tends to be used on large contracts. For small, labour intensive operations, it is likely that the performance specification will be used. In adopting this method regular field tests will have to be carried out to measure the moisture content of the compacted soil and its dry density. The frequency of this testing may be reduced if a trial compaction of a small test embankment is made so that alternative compaction methods and efforts can be compared.

The degree of compaction achieved in the field is measured in terms of the relative compaction, which is the ratio of the field compacted dry density to the maximum dry density measured in the laboratory in the Proctor or modified Proctor test, measured as a percentage. The relative compaction of a loose soil is about 75 to 80% and a reasonable level of compaction using manual methods should be at least 90%.

In the course of the embankment construction, control tests should be performed to verify that the specified design characteristics are being complied with during compaction. These tests consist mainly in confirming the density and permeability of the earthfill. The procedures used to carry out the geotechnical tests are illustrated in Chapter 3. In situ tests should be performed by a skilled technician provided with the proper equipment. A preliminary verification of the fill moisture content may be done, for example, by computing the quantity of water added to the fill on the basis of the number of water bowsers on the embankment in a specific period of time.

In order to monitor the quality, the moisture content and the dry density of the compacted earthfill, field and laboratory tests must be made at frequent intervals on samples taken *in situ* as the embankment is built up, at a sampling frequency of at least one test every 500m^3 of earthfill, or 2 density samples in every layer. The tests required, and their frequency, are considered below.

In-situ density and moisture content tests should be measured using the *Sand Cone Method* (see ASTM D1556-64 or AASHTO T191 61 Annual Book of ASTM Standards: Soil and Rock; Building Stones). The average of two to three measurements per test should be taken.

For cohesive soils, where it is necessary to use a manual procedure of construction described earlier, *in situ* density test needs to be reliable to measure a large portion of soil in place (including the interface of contact of the clay units). A reliable alternative for the sand cone, is to excavate an almost cubic pit with smooth and regular perpendicular faces. Suitable dimensions would be 30 or 40 cm per side and the entire excavated material is used for the determination of the dry density.

Trial embankments

Trial embankments are used to determine the best method to achieve the required dry density (relative compaction). They are particularly necessary where there is no laboratory equipment available to carry out compaction tests. The procedure is as follows:

- Dimensions of the test embankment: 6 m long x 5m wide x 0.60 m high
- Prepare a clean and flat foundation.
- Construct the trial embankment using the method envisaged for the main embankment.
- Place earthfilling in layers of no more than 20 cm thick.

The embankment should be separated into three different strips:

- Strip 1: The material should be at its natural moisture content, with:
  -one layer compacted with 6 blows per 400 cm^2
  -one layer compacted with 8 blows per 400 cm^2
  -one layer compacted with 12 blows per 400 cm^2

- Strip 2: The natural moisture content of the material should be slightly increased, with:
  -one layer compacted with 6 blows per 400 cm^2
  -one layer compacted with 8 blows per 400 cm^2
  -one layer compacted with 12 blows per 400 cm^2

- Strip 3: The natural moisture content of the material should be significantly increased, with:
  -one layer compacted with 6 blows per 400 cm^2
  -one layer compacted with 8 blows per 400 cm^2
  -one layer compacted with 12 blows per 400 cm^2

As soon as possible after each compaction, the various strips should be tested to determine the in-situ density and moisture content. The best result obtained should then be used as the reference value for the routine control tests. A trial embankment should be made for each relevant type of soil, and the results used as the reference for quality control, design choices and acceptance or refusal of particular soils from potential borrow areas.

On a small project an initial trial can be carried out by initially conditioning the soil, by adding water as necessary, so that the soil is just wet enough to ball in the hand. The soil should then be spread in layers of maximum thickness 20 cm and compacted. In-situ density and moisture content tests should then be carried out. If necessary the compactive effort should be modified until 90% relative compaction is achieved. This provides the basis for the field compaction method to be adopted in the main construction programme.

Rock-fill embankments

Selected rock fill is coarse material and on large construction projects individual particles may be up to 50 cm in size. For small projects largely constructed using manual labour the maximum size is limited for practical reasons to about 25 cm to 30 cm. It is superior in engineering performance than earthfill but it is more difficult to excavate, requiring blasting or ripping.

The rock-fill will have a range of particle sizes from 30 cm down to fine rock fragments and it is important that a gradation of particle sizes is used so that the finer particles fill the interstices between the larger fragments and therefore provide a well packed and stable structure. It is important during construction that segregation of particle sizes does not occur and the rock should be placed in layers to allow control to be maintained. The thickness of the layers should be such that the maximum particle size is no more than two thirds of the layer thickness. Several conditions should be maintained during construction of rock fill layers.

- The rock fill should be spread so that the coarser fragments do not accumulate on the surface of the layer. This is best achieved by dumping the fill behind the edge of the advancing fill layer and then pushing the material over the edge. This allows the coarser particles to roll to the bottom of the layer and the finer material to fill the voids between.

- The fine particles should be non-cohesive so that vibration or washing encourages them to move through the voids and increase the final density. If cohesive particles are present they tend to stick and maintain their original placed position and voids may remain within the fill between larger particles.

- Preferably, heavy vibrating rollers should be used to compact each layer. On small projects this may be difficult and therefore the use of a uniformly graded rock fill may be more appropriate. Such fill gains its stability by interlock between the particles.

On smaller projects use can often be made of low-grade rock fill. This is often yielded from the more weathered near-surface rock layers and is economic to use when rock is deeply weathered, which would require considerably deeper excavation to exploit the strong unweathered material.

Filters and protection

Rip-rap protection layers

In a large impoundment, the wind can produce waves, the height of which depends on the wind fetch. Upstream, the embankment must be protected from these waves. Downstream it has to be protected against the erosion caused, for example, by runoff or by the passage of cattle. A single layer of rip-rap is generally enough to protect the embankments of small dams. Rip rap should consist of individual rock fragments that are dense, resistant and free from cracks or other defects. Rip-rap comprises well graded materials, usually placed in bulk. Stones for the rip-rap should weigh between 7 kg and 70 kg and the shape of individual particles should not contain elongated or tabular particles. Between the size limits the size distribution should be relatively even. The layer is generally put in place manually and it requires a small foundation trench at the toe (see Plate 7.10). Sometimes the interposition of a gravel layer may be necessary to act as a filter between the embankment and the rip-rap.

PLATE 7.10
Utilization of Rip-rap

The rip rap needs to be placed in a manner to ensure that the larger rock pieces are uniformly distributed and that the smaller pieces fill the spaces between the larger pieces. The result should be a well keyed, densely placed, uniform protective layer of a specified thickness.

Filter layers

If there is a significant difference in size between the main earthfill or rockfill of the embankment and the overlying rip-rap the potential exists for piping to occur where the finer material is washed through the outer rip-rap layer. This could lead in the worst case to failure of the structure. To avoid this an intermediate filter layer or layers are required.

Placement of sand and gravel filters and rip-rap should be carried out simultaneously. Starting from the toe of the embankment, the filter layers are placed over a width of about 0.5 to 1.0 m and immediately covered by the rip-rap. This is necessary in order to avoid damaging the filter layers.

The size and grading of the filter material is calculated on the basis of the grading of the material it is placed against, using the Terzaghi Filter Rule (chapter 6):

$$\frac{\text{D15 (of filter)}}{\text{D85 (of fill)}} < 4 \text{ to } 5 > \frac{\text{D15 (of filter)}}{\text{D15 (of fill)}}$$

This requires that to prevent the embankment fill material from passing through the voids of the filter the 15% size of the filter must not exceed 4 to 5 times the 85% size of the fill. To keep seepage forces in the filter low and acceptable the 15% size of the filter also must be greater than 4 to 5 times the 15% size of the fill. The grading of the filter material calculated on this basis should then be compared to the grading of the rip-rap to determine if an additional layer of larger filter material is required. In this way a series of filter layers may prove necessary.

During inspection visits to control the embankment construction, the already completed filter layers should also be checked. Every 100 m of embankment length, samples of gravel and sand for filters must be collected and submitted to grain size analysis. The layers must be to design thickness, with a tolerance of ±10%, and the materials must meet the specified quality, which normally corresponds to the same gradation limits as for a concrete sand (0.0 - 4.0 mm) and gravel (4.0 - 40.0 mm).

A lack of particular grain size categories in the grading makes it necessary to remediate with an appropriate quantity of this material and submit it for grain size analysis.

Geotextile placement and control

The general procedure for laying a geotextile lining beneath rock rip-rap is as follows:

- First, wherever possible, remove any water from the immediate vicinity of the site where the fabric is to be placed, either by diverting the water or de-watering the area.

- Prepare the slope over which the fabric is to be laid: remove debris, stones, rocks, stumps, etc., and fill in voids or slope irregularities.

- If the site is dry, excavate the toe trench, then spread the fabric on the slope and place and anchor it against the toe trench walls. Anchorage should be done according to the design specifications. Dimensions of the trench toe, type and density of anchorage bamboo stakes or similar and rock on top of the fabric in a sausage configurations. Proceed up the slope from the toe trench.

- If the site is under water, the toe trench must be excavated and the fabric simultaneously placed and anchored. Thus two factors must be taken into account: the presence of the water and having to proceed up the slope. It is important that the fabric be anchored on the slope along its entire underwater stretch, since water below the fabric can lift it and wave action can tear it or rip it out of the toe trench.

- The amount of the overlap between fabric ends and stripes depends on the nature of the *in situ* slope soil (mainly its compressibility), on the type of erosion control structure to be placed above the fabric (mainly its weight), and on the deformation characteristics of the fabric itself (its creeping capacity). Overlap is generally from 0.25 to 0.50m according to the design specifications. If the fabric ends are to be joined by bonding or sewing, the joint strength must be at least 80% of the strength of the fabric itself.

- Secure the upper end of the fabric into an anchorage trench. Care must be taken in order that surface water cannot infiltrate beneath it and some protection against vandalism and prolonged exposure should be taken, particularly in warm, sunny climates, since the fabrics are usually made from ultraviolet-sensitive material.

- To protect the material from damage from the placement of the rip-rap it should be protected by placing a 10 to 15 cm layer of sand and gravel. Start at the toe and work up the slope.

- On-site supervisory checks should include measurement of trench dimensions, backfill and the overlaps.

Turfing protection for the downstream slope
Square grass sods about 0.30 to 0.30m, and 50 to 100 mm thick should be used. The sods should be anchored to the downstream slope using sticks of bamboo or similar. Control consists of simply a visual checking of the correct positioning of the slope protection.

Cut-off drains in the embankment abutment areas
Earthfill erosion provoked by the runoff from the valley side-slopes above the embankment abutments represents a constant threat to all hydraulic structures. To afford protection, cut-off drains can be constructed to collect and disperse the runoff coming from the valley side-slopes. (see figure 7.5).

FIGURE 7.5
Location of cut-off drains

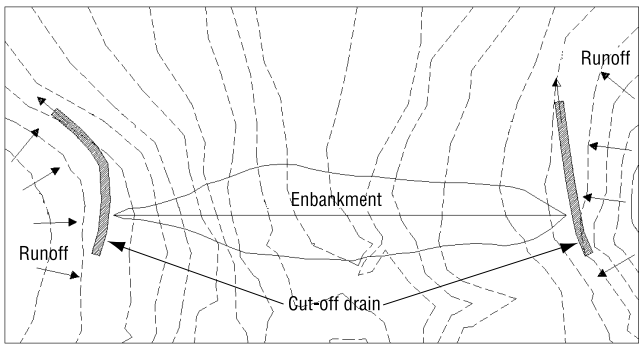

Other control checks

Seepage checking under and within the embankment
A small dam undergoes its first test when water fills the impoundment for the first time. If the water reaches a relatively high level in the impoundment and remains stable at this level for some days, a portion of the embankment becomes saturated and a steady-state seepage condition is reached in the earthfill (see figure 7.6). If the steady-state phreatic surface is close to the downstream side of the embankment, the latter is dampened by capillarity. If, as sometimes happens, springs appear on the sides of the embankment, it generally means that the phreatic line has intercepted the embankment's slope.

These springs can also be caused by an imperfect earthfill construction, resulting in some zones of higher permeability than the average. One should always take note of the time elapsing between impoundment filling and the emergence of wettings or springs on the downstream shoulder of the embankment. If this time is significantly shorter than the time theoretically required for water infiltration in the earthfill, then it can be deduced that the springs are caused by a discontinuity in the earthfill permeability.

If springs appear on the downstream shoulder of the embankment, their flow rate should be constantly checked. If the quantity of water flow is negligible and the water is very clear, there should not be immediate danger of an earthfill blow-out. On the contrary, if the seeping water is not clear, it means that the water seeping through the earthfill contains some clay, probably eroded from the fill. This can be very dangerous because the discharge of flow will tend to rise, transporting increasingly higher amounts of material, until it creates a drain through the earthfill, causing an embankment blow-out.

If a spring with the above mentioned characteristics appears in the downstream shoulder of the earthfill, a small bund, made of earth or of sacs filled with sand, should be built around the spring to increase the water level. This should cause the water gradient between the embankment upstream and downstream to reduce and consequently diminish the seepage. Generally, the fine material carried in the impoundment by runoff water tends to settle in the earthfill as the water keeps seeping. For this reason the earthfill impermeability tends to increase and wettings and springs tend to diminish.

FIGURE 7.6
Steady-state seepage condition in the earthfill

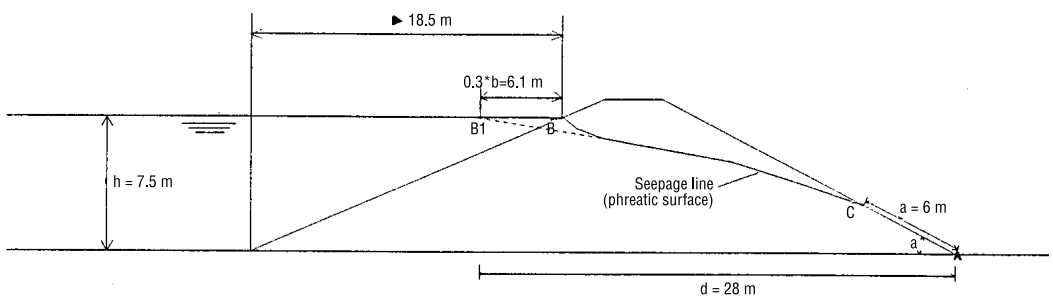

Checking the settlement of earthfill and underlying soils

The actual levels of the substructures of which a hydraulic work is composed (e.g. embankment top, spillway crest and pipeline) should match as closely as possible the values established in the design. The settlement of each level should therefore be carefully attended to. Earthfill and foundation soils are subject to an immediate elastic settlement that takes place in the short term, while the embankment is still being constructed and immediately afterwards. A primary consolidation settlement takes place in the long term , due to the dissipation of water in the clay component of the soil. This settlement requires particular attention, as its prolonged unfolding involves higher risks for the structure. In general, it can be said that the higher the soil clay content, the more protracted its settlement. If the clay content in the soil foundation or in the earthfill is high, checks will have to be carried out periodically for about two years. In presence of a high clay content, it will be convenient to build the earthfill up to a level slightly higher than

the one specified in the design, in view of the subsidence caused by the foundation soil settlement. Differential settlement between the earthfill and foundation soil can also cause a leak in the embankment. The risk that a leak of this sort appears remains for up to two years after the completion of the earthfill construction.

Assembly and erection of gabions structure

Site preparation

The general remarks concerning site preparation for the earthworks also hold true for the gabion structures. However, in the construction of gabion structures the methods employed and the techniques involved are significantly simpler.

Preparation of the foundation

The first step in building gabion works involves the setting out of the civil works, in accordance with the design. Then the preparation of the foundation layer can start immediately.

An important advantage of gabions with respect to other construction materials is that they can be directly placed on any type of soil. In spite of that, especially in hydraulic structures, it is preferable to avoid direct contact between the gabions and the natural soil. In fact, particularly if there is a high fines (silt or clay) content in the soil, water passing through and on the structure can scour the soil. In this case, it is recommended that a bedding layer of granular material be placed between the gabions and soil. This layer has to be leveled and compacted thoroughly before the gabions are placed on it. This layer can be easily compacted with the aid of manually operated machines, with small engines, such as frog rammers and vibrating plates. If small machines are not available, then adequate manual tools must be used because the foundation area is too small for larger machinery (see Plate 7.11).

Plate 7.11
Manually compacting foundation layer for gabion placement

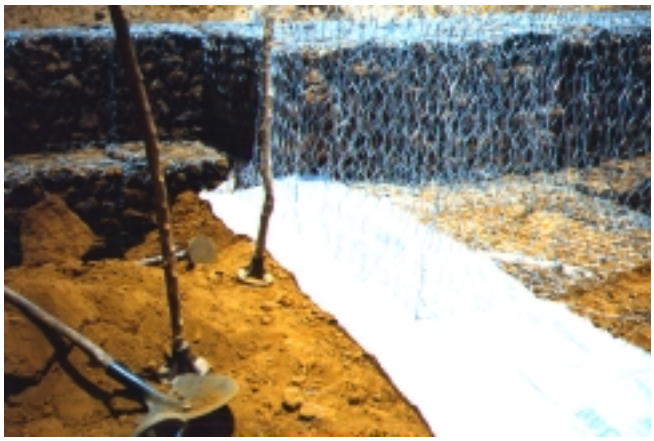

Use of geotextile filter layers

As mentioned above, where the potential exists for water to flow directly through gabions, the contact between the gabions and the natural soil should be protected against scour. An alternative to the placement of a bedding layer is the insertion of a layer of geotextile between the gabions and the natural soil or foundation material. The best suited to be used with gabions is the quality weighing between 500 and 700 g/m^2. A geotextile allows the passage of water, but not soil, and protects the material adjacent to the gabions from scour. To avoid leaks through holes in the geotextile, the foundation layer should to be smooth and free from angular stones, and the gabions must be placed on the geotextile with great care. (see Plate 7.12).

Given that the geotextile is relatively expensive, as well as in short supply in developing countries, it may be substituted with different, cheaper materials, easier to find locally. For example, bags made of thin interwoven plastic strips can be sewn together to form rolls of the required length and used instead of geotextile as they are sufficiently permeable for the purpose required.

Gabion construction

Setting up gabion baskets

Gabions are carried folded to the site. When they have reached the site, the following operations have to be done:

- the gabion nets are completely opened and stretched out on the soil (see Plate 7.13);
- unfold the gabion on a firm flat surface;
- stretch the gabion and straighten any kinks in the mesh
- assemble each gabion individually by raising the sides, ends and diaphragms;
- ensure that all bends are in the correct positions and that the tops of all four sides are at the same height;
- lace the four vertical edges of the gabion. The lacing can be carried out either with manual or automatic tools. The utilisation of manual and self-made tools is generally adequate;
- lace interior diaphragms, if they exist, to the bottom and to the sides of the gabion basket (see figure 7.14);
- meshed diaphragms are used to divide the gabion into different compartments, so as to avoid stones shifting and to maintain the original gabion shape;
- begin lacing at the top, twisting the end of the lacing wire around the edges, then lacing around the edges being joined, using a double tie through each mesh in turn, and tie off securely at the bottom;
- turn the ends of all lacing wires to the inside of the gabion on completion.

PLATE 7.12
Placement of geotextile

PLATE 7.13
Opening the gabion net

PLATE 7.14
Assembling the gabion baskets

Placing

Position the assembled gabion on its site. Secure the side from which works is to start, either by lacing to completed works or to stakes driven into the ground at the gabion corners. These stakes must reach at least the top of the gabion and be braced before tensioning the gabions. Either proceed with stretching and filling of the gabion, or join more gabions to the structures as required, to be stretched as a group.

Before tensioning can commence, all edges (top, bottom and sides) of the line of gabions must be firmly laced. The same method adopted for assembling gabion baskets has to be used to join gabions to one another, and to the structure. In doing so, it will be very important to adhere to the specified gabion structure dimensions and sizing (see figure 7.7). Connect the tension frame to the last gabion and tension using a wire strainer.

FIGURE 7.7
Gabion tensioning

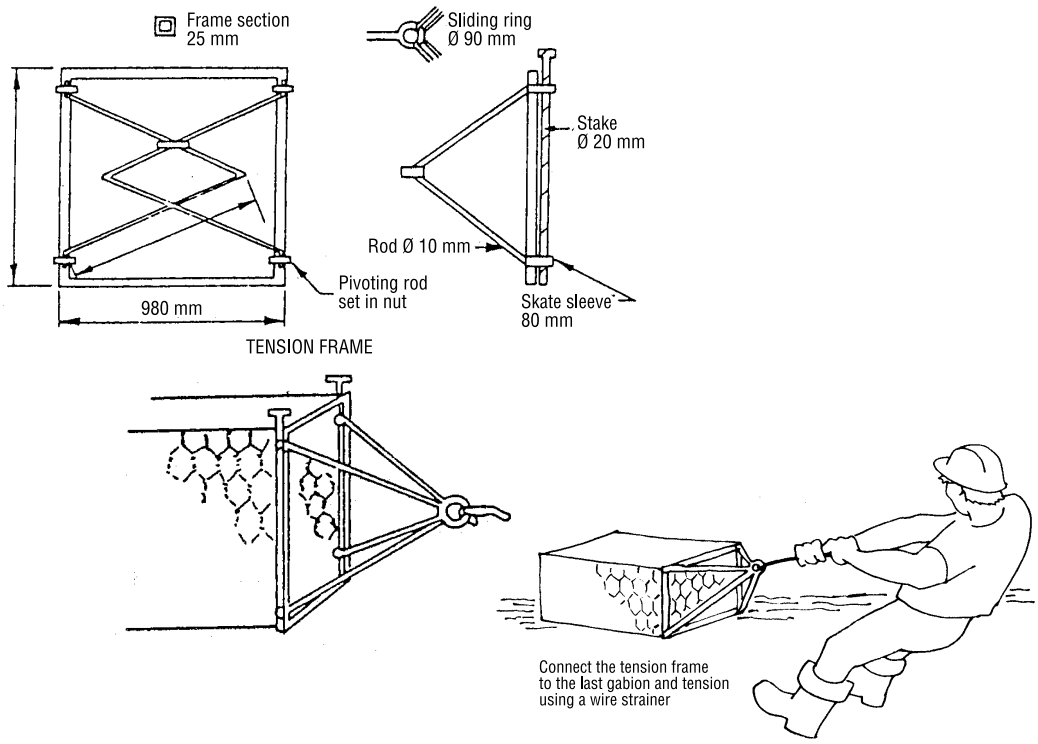

Filling

The size of the stones is depends on the required gabion thickness and its mesh size (USACE, 1994). The smallest stone must generally be larger than the wire mesh openings (usually about 10 cm) and the largest one should still be easy to pack in the gabion with the other stones. The stone size is generally between 15 and 30 cm. Manual filling of gabions is to be preferred to mechanical filling, because the rubble can be placed in the basket more precisely, diminishing the voids. Mechanical filling can also cause unwanted stress to the net. The stones should be arranged in layers in the baskets, so as to minimize the voids in the gabion and to preserve gabion shape.

During the filling, horizontal and vertical bracing wires should be put inside the baskets to strengthen them by pulling together the baskets' opposite sides (see Figure 7.8). These bracing wires are to be wrapped around two mesh wires at both front and back faces, and positioned and tensioned to ensure a rather flat face free of excessive bulges and depressions. The bracing wires are generally made of the same material used for the construction of the gabion baskets. The distance between two bracing wires must not be more than 35 cm. It will be useful to verify that the top level of a line of gabions is straight before closing them (see Plate 7.15).

The number of gabions to be positioned before starting to fill them up depends largely on the structure overall shape and the project organisation. For example, if there is a risk that runoff will occur during the gabion building, no more gabions than what can be readily filled and closed should be positioned in advance. The rubble should be composed of durable stones, free of cracks or major flaws. Sometimes, the structure is located close to a stream bed, where rounded cobbles are plentiful. In this case, especially if the stream is rather small, to preserve the stream bed's natural armour cobbles should not be extracted downstream from the structure, but only upstream.

FIGURE 7.8
Bracing wires

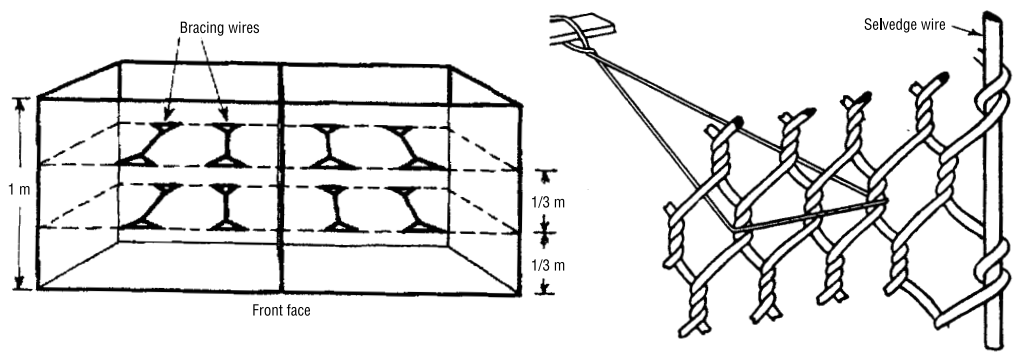

PLATE 7.15
Verifying the top level before closing

Additional layers

Hydraulic structures are generally composed of superimposed layers of gabions. The first layer has to be completed before starting to build the overlying one. When a layer of gabions is superimposed above another layer, the two layers should be strongly laced to one another before starting to fill the overlying one (see Plate 7.16). Sometimes, in structures with a stepped shape, only a part of the superimposed layer rests on a lower layer of gabions. The remaining part rests directly on the earthfill has to be compacted carefully, and its adherence to the lower layer of gabions should be ensured before superimposing the next layer (see Plate 7.17).

Making gabion weirs impervious

After completion of the gabion weir structure, it is generally necessary to make it impervious in order to keep the water level above the weir. The best way to waterproof a weir structure is to place a compacted earthfill in contact with the upstream face of the structure, as shown in Plate 7.18. A stepped surface of the structure will facilitate the bonding between the weir and the earthfill, because the stepping limits the thickness of the earth-fill layer immediately adjacent to the gabion and manual compaction is more effective. Before building the earth-fill, a geotextile layer should be laid on the weir, as shown in Plate 7.19. The fill has to be put in place with care to avoid damaging the geotextile.

PLATE 7.16
Superimposing gabion layers

Concrete lining of gabions

A number of features can contribute to damage the gabions: e.g. weir height, water level, characteristics of gabions, stone filling, grain size of the material transported by runoff. Typical damages are basket tear, provoked by the rubbing of transported stones against the wire of gabion baskets, loss of stones caused by the crumbling of low quality stone within the baskets due to the continuous collisions provoked by the water motion. However, most of these damages can be avoided by adding a lining in reinforced concrete (see Plate 7.20). The lining is realized with a concrete layer about 20 cm thick, of limited length separated by joints in order to avoid cracks provoked by thermal variations, reinforced with a grid of iron bars up to ø 14 mm. The

reinforcement bars have to be anchored to the underlying gabions with steel stirrups. These must be sunk with concrete into the stones of the gabions (see figure 7.30). Plastic pipes have to be inserted vertically into the concrete slabs in order to release the water pressure underneath the concrete. The distance between two pipes should be about 1 m.

Being smooth, the lining also contributes to preventing grass and shrubs transported by the water, to be trapped in the basket wire. It should be noted that the accumulation of these transported materials tends to modify the shape of the weir structure and, consequently its hydraulic properties.

Counter weirs lining and anchoring

Grass and shrubs carried by the water can cause the same problems to counter weirs as for weir crests. For this reason, lining of the counter weir may also be necessary using the same procedure as for the weir crest. It may also be useful to anchor the counter weir to the foundation soil in order to prevent structure sliding. Wooden or steel rods, depending on material availability, should be positioned against the downstream face of the counter weir and driven into the soil (see Plate 7.21).

PLATE 7.17
Fill compaction next to the gabion

PLATE 7.18
Using earthfill and geomembrane to waterproof the weir

PLATE 7.19
Placing the geotextile

PLATE 7.20
Stilling basin lined with reinforced concrete

Interface between soil and gabions

The contact between gabions and earthfill or natural soil is a critical detail in gabion structures, especially when immersed into flowing water. This can provoke scouring of the earth layer, below and on the sides of the gabions. This phenomenon is caused by the localized acceleration of the water flowing in the channels constituted by the voids between the stones. The water flows progressively removes the finest earth particles, resulting in gabion settlement. Once gabions stabilize after this initial settlement, this phenomenon may stop, if the clay contained in the soil has been transported away. However, the scour may also continue, removing earth below and around the gabion until collapse of the structure eventually occurs.

Two main precautionary measures can be adopted to stop the scour created by the water flow:

- Place a filter layer between the gabions and the natural soil or earthfill, or
- reduce the amount and/or the velocity of water flowing through the gabion structure.

FIGURE 7.9
Iron bars for anchoring concrete lining

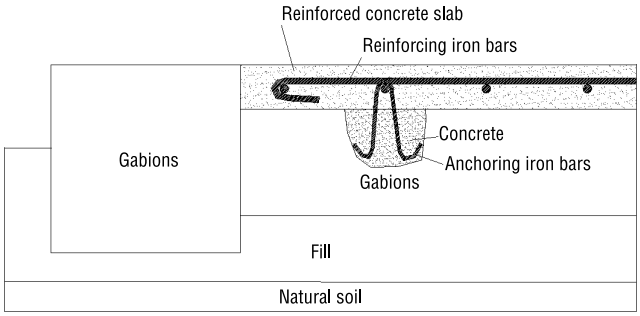

The interposition of a layer of properly graded material or geotextile to avoid the problems caused by the direct contact between gabions and natural soil or earthfill has been described in Chapter 6. This precautionary measure is generally satisfactory for most gabion structures. However, if the water flowing through the gabions is substantial, it may be useful to provide extra protection to the weakest parts of the gabion structure. In fact, a water flow, in the long run, can damage even geotextile or properly-graded material layers placed below or on the sides of gabions structure. The critical points that could require extra protection in a gabion structure are:

- the vertical interface between the gabion shoulders and the earthfill
- the toe of the weir or counter weir
- the gabion walls on the sides of the spillway channel
- the stilling basin downstream of the weir

PLATE 7.21
Lining and anchoring a counter weir

Semi-pervious or impervious cut-off screens to stop or reduce the water flow should be inserted at these locations. Semi-pervious screens can be created with a layer of geotextile inserted between adjacent gabions (Plate 7.22). This type of semi-pervious screens are flexible and permeable to air and water. Alternatively, impervious screens can be constructed by inserting walled gabions in the structure. These walled gabions are built in the same way as normal gabions but, during basket filling, voids between stones are completely filled with concrete (see figure 7.10).

PLATE 7.22
Semi-permeable cut-off screens

Figure 7.10
Impermeable cut-off screens

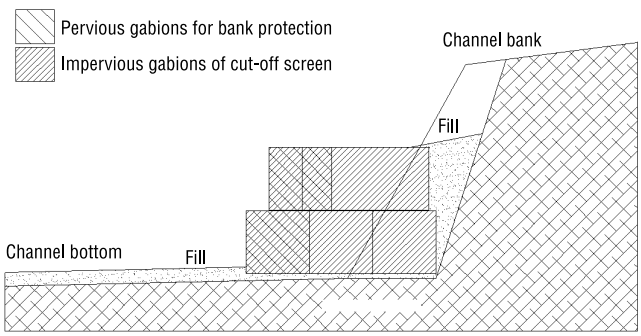

Chapter 8

Construction and control of concrete

Concrete is a construction material that is made up of constituent materials, aggregate, cement and water, and its properties are dependent on the characteristics of each of those materials and the way in which they are combined. The aggregate is, ideally, inert. When mixed with cement and water these hydrate, a reaction that can continue for many years but the working strength is achieved after a few days.

Concrete quality is affected by the aggregate grading and quality, the cement type and quality, the water quality and the proportion in which these ingredients are mixed together. It is also affected after mixing by moisture movement and drying shrinkage. Its main strength is achieved and assessed after 28 days but it is essential that the durability is maintained so that it can resist the effects of frost or high temperature, abrasion in dynamic regimes and atmospheric pollution.

To ensure a good product, quality control is necessary to monitor aggregate quality, cement quality, water quality and the mix. The mix should provide a durable product of low permeability so that after curing it resists the penetration of water and this depends on the quality of the constituent raw materials and the workmanship.

Aggregates

Concrete aggregates usually consist of natural sand and gravel or crushed rock, or a mixture of these materials. Natural sand and gravel are the most common and should be used when they are of satisfactory quality. Crushed rock for coarse aggregates and for sand can be used when suitable materials from natural deposits are not available. The shape of the particles of crushed rock depends largely on the type of rock and the methods of crushing. In general crushed aggregate, as compared with natural gravel, requires more sand to compensate for the angular shape of the particles in order to obtain a mix of comparable workability. Generally it is necessary to utilise approximately an additional 20% of sand.

Artificial aggregates used for special purposes consist mainly of crushed, air-cooled blast-furnace slag and specially burned clays. Slags are economically available only in the vicinity of blast furnaces. Lightweight aggregate obtained in vitrifying expanding clays in kilns is used for special concrete for insulation, fireproofing and lightweight slabs for floors.

Grading

The particle size distribution of aggregates, or the proportion of the different sizes of particles, is determined by sieving. The grading is expressed in terms of the percentage by weight passing various sieve sizes. The test sieves to be used and the grading limits are designated by the standards agencies. In Britain these are BS410 defining the sieve sizes and BS882 defining the grading limits for each sieve. The equivalent US standards are ASTM E 11-87, and ASTM C

33-93. Ideally, aggregates for concrete should be continuously graded with a range of particles from the largest to the smallest.

The sieve sizes in general use in British practice are 75 mm, 63 mm, 37.5 mm, 20 mm, 14 mm, 10 mm and 5 mm for coarse aggregate and 2.36 mm, 1.18 mm, 600 micron, 300 micron and 150 micron for fine aggregate. For structural reinforced concrete coarse (> 5mm) and fine (< 5mm) aggregates are separately specified because this gives closer control on particle size distribution. The BS882 grading limits for coarse and fine aggregates are given in Figure 8.1 and for all-in aggregate in Table 8.1.

Aggregates may be specified as 'all-in' which is a general grading curve for both the coarse and fine aggregate together but the disadvantages of this are that the grading can vary considerably and the all-in grading is seldom used for structural reinforced concrete. However, it may find more favour in rural situations.

FIGURE 8.1
BS882 grading curves for coarse and fine aggregate for concrete

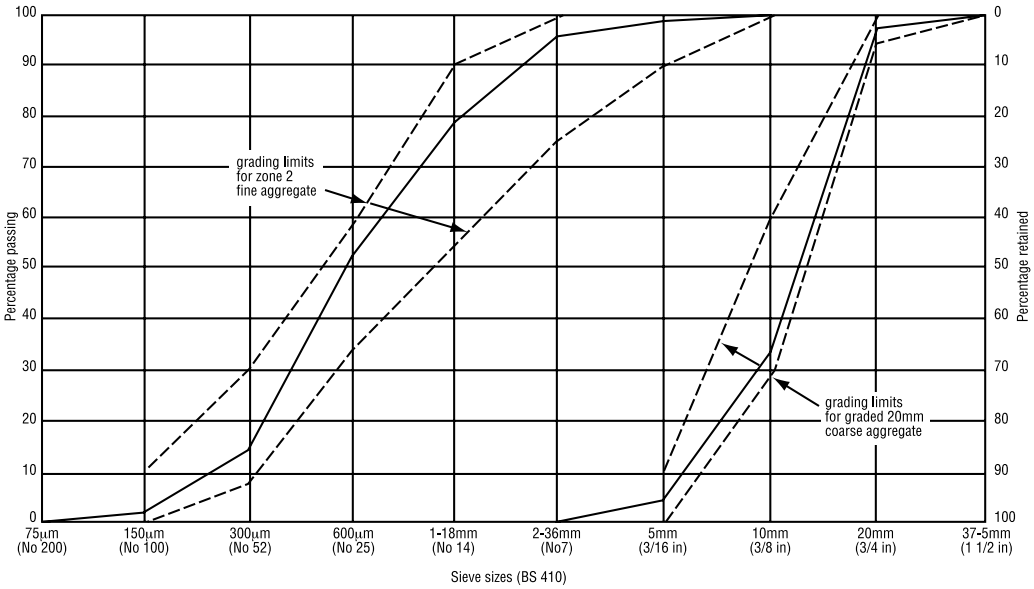

TABLE 8.1
Grading curves for all-in aggregate for concrete

B.S. test sieve	Percentage by weight passing B.S. sieves	
	nominal size	
mm	40 mm	20 mm
75	100	-
37,5	95-100	100
20	45-75	95-100
5	25-45	30-50
microns		
600	8-30	10-35
150	0-6	0-6

The specifications usually restrict the maximum nominal size of aggregate to 40 mm and in structural work 20 mm is often used because of the need to penetrate the reinforcing bar spaces. The use of larger sizes leads to little saving in the cost of concrete, larger particles increase the abrasive action in the mixer, segregate easily, and make placing of concrete more difficult.

Particle shape and texture

It is preferable to aim for an approximately equi-dimensional shape in the particles making up the aggregate. If particles are excessively elongated or flaky they may affect the strength of the mix. Angular particles also reduce the workability of the mix and increase the water demand.

The surface texture of the particles depends on rock type and affects the strength of the bond between the aggregate particle and the cement paste.

Contamination

Aggregates can be contaminated by silt, clay, mica particles, coal, humus, wood fragments, other organic matter, chemical salts, surface coating and encrustation, etc. Contaminating substances in the concrete act in a number of ways: such as a decrease in strength and durability or unsightly appearance. They may also inhibit the development of maximum bond between the hydrated cement and the aggregates. Fortunately, excess of contaminating substances can frequently be removed by simple treatments: silt clay, powdery coatings, soluble chemical salts, sand, are usually removable by washing.

Durability

Aggregates are considered physically sound if they are strong and capable of resisting weathering without disruption or decomposition. Shale, friable sandstone, some micaceous rocks, clayey rocks, some very coarsely crystalline rocks, and various cherts are examples of physically unsound aggregates materials; these may be inherently weak or may deteriorate through water saturation, alternate wetting and drying, freezing, temperature changes, or by the disruptive forces developed as a result of growth of crystals in the cleavage planes or pores.

Chemical reaction between reactive aggregates and alkalis in cement can provoke expansion which deteriorates the concrete. Reactive substances can be silica minerals, opal, chalcedony, tridimite, cristobalite, zeolite, heulandite, phyllites, rhyolites, dacite and andesite as well as derived tuffs.

Other types of chemical alteration, such as oxidation, solution or hydration can decrease the physical soundness of aggregates after their incorporation into the concrete, or may produce unsightly exudation or staining (e.g. gypsum).

Expansion and shrinkage

Shales and clays are materials which expand when they absorb water and shrink when they dry. Expansive clays, which occur in some basalt rocks and on exposure to the atmosphere, absorb water and expand causing the aggregate to disintegrate. If the expansion occurs within hardened concrete the pressures can be high enough to crack the concrete.

Relative density

Relative density of aggregates is important only when structural considerations require that the concrete has minimum or maximum weight. When light weight is desired, artificial aggregates of low density are frequently used instead of natural aggregates.

Relative density is a useful, quick indicator of suitability of an aggregate. Low relative density frequently indicates porous, weak, and absorptive material, and high specific gravity usually indicates good quality. However, such indications are not reliable if they are not confirmed by other indicators.

Water

Quality of water

Water for concrete should be reasonably clean and free from significant quantities of silt, organic matter, alkali, slats and other impurities. Water from a stream carrying an excessive quantity of suspended solids should first stand in settling basins to be clarified. The maximum turbidity limit is 2 000 part per million (2 g/litre).

Clear water without saline or brackish taste may be used for concrete without further testing. However, water containing more than 1 000 parts per million of sulfate should be analysed. Hard, bitter water is likely to contain high sulfate concentrations. All doubtful sources should be sampled.

For a concentration of sulfate of 0.5 % the reduction in strength is about 4%; a concentration of 1% produces a reduction of more than the 10%. Concrete made with water containing sodium chloride (common salt) produces significant reduction in strength: 5% reduce the strength of about 30%.

Water content

The water content expressed as weight of water per unit volume of concrete is the major factor influencing the workability of concrete. For a given gradation of aggregates, the higher the water content the greater the workability which is measured in the slump test (Table 8.2).

Uncrushed aggregates require a lower water content than crushed aggregates and the smaller the maximum size of the aggregates the higher the water content needed. The grading of the fine aggregates has a considerable effect on the water requirement since it has a large specific surface area which requires lubrication.

Values of the free water content for four different levels of slump are given in theTable belowfor different types and maximum sizes of aggregate. Water content needs to be controlled to ensure adequate resistance to compressive strength; but in order to maintain the required workability the best procedure is to vary the fines content of the concrete mix and maintain the same water content.

TABLE 8.2
Free water content

Maximum Size of Aggregate (mm)	Type of Aggregate	Slump (mm)			
		0-10	10-30	30-60	60-180
10	Uncrushed	150	180	205	225
	Crushed	180	205	230	250
20	Uncrushed	135	160	180	195
	Crushed	170	190	210	225
40	Uncrushed	115	140	160	175
	Crushed	155	175	190	205

MIX DESIGN

The mix design is formulated to achieve a required strength consistent with an acceptable workability. The strength may be specified but in the absence of a specification Table 8.3 gives a range of concrete grades and strengths for various uses.

Once an average strength has been decided on there are a number of methods that can be used to arrive at the proportions of cement, water and aggregate. They would all need trial mixes to be made and the strength and workability to be determined. On the basis of the results of these tests the mix may be varied to give an acceptable strength in line with a reasonable workability.

Initially it is easier to adopt a prescribed mix, which has its constituents fixed as a proportion by weight. It will be seen that for the same workability a number of options are possible for varying the cement, sand, aggregate and water content. Depending on the type and grading of the available aggregate and knowing the required strength a mix or a choice of mixes can be selected from Table 8.3 to enable trial mixes to be made. In terms of the water content it is suggested that a free water/cement ratio of 50 % is used initially and this may be adjusted on the basis of the tests conducted on the trial mix.

In trial mixes at least three separate batches of concrete should be made for each chosen design and adopting the practice to be used on the project. The workability should be determined using the Slump test (Plate 8.1) and three cubes from each batch should be made for strength testing at 7 days and three cubes from each test for strength testing after 28 days. The 28 day strength should be the reference strength for compliance to a specification.

TABLE 8.3
Recommended grades and prescribed mixes for various concrete grades

Concrete grade	Characteristics Strength N/mm^2	Lowest grade for compliance with appropriate use	Nominal max. Size of agregates (mm)	40		20		14		10	
			Workability	Medium	High	Medium	High	Medium	High	Medium	High
			Limits to slump that may be expected (mm)	50-100	100-150	25-75	75-125	10-50	50-100	10-25	25-50
7	7,0	plain	Cement(kg)	180	200	210	230	--	--	--	--
		concrete	Total aggregate (kg	1950	1850	1900	1800	--	--	--	--
			Fine aggregate	30-45	30-45	35-50	35-50	--	--	--	--
10	10,0	plain	Cement(kg)	210	230	240	260	--	--	--	--
		concrete	Total aggregate (kg)	1900	1850	1850	1800	--	--	--	--
			Fine aggregate	30-45	30-45	35-50	35-50	--	--	--	--
15	15,0	reinforced	Cement(kg)	250	270	280	310	--	--	--	--
		concrete w.	Total aggregate (kg)	1850	1800	1800	1750	--	--	--	--
		light aggreg.	Fine aggregate	30-45	30-45	35-50	35-50	--	--	--	--
20	20,0	reinforced	Cement(kg)	300	320	320	350	340	380	360	410
		concretew.	Totalaggregate(kg)	1850	1750	1800	1750	1750	1700	1750	1650
		denseaggreg.	Sand*								
			Zone1(%)	35	40	40	45	45	50	50	55
			Zone2(%)	30	35	35	40	40	45	45	50
			Zone3(%)	30	30	30	35	35	40	40	45
25	25,0	reinforced	Cement(kg)	340	360	360	390	380	420	400	450
		concretew.	Totalaggregate(kg)	1800	1750	1750	1700	1700	1650	1700	1600
			denseaggreg. Sand*								
			Zone1(%)	35	40	40	45	45	50	50	55
			Zone2(%)	30	35	35	40	40	45	45	50
			Zone3(%)	30	30	30	35	35	40	40	45
30	30,0	concretewith	Cement(kg)	370	390	400	430	430	470	460	510
		post-	Totalaggregate(kg)	1750	1700	1700	1650	1700	1600	1650	1550
		tensioned	Sand*								
		tendons	Zone1(%)	35	40	40	45	45	50	50	55
			Zone2(%)	30	35	35	40	40	45	45	50
			Zone3(%)	30	30	30	35	35	40	40	45

QUALITY CONTROL

The slump test

The term "concrete consistency" is used to qualify the fluidity of concrete, a measure of its workability. It is measured by means of the Slump test. This is a practical means of measuring the workability and should be carried out as a regular check that the mix is still meeting requirements. Changes in the result may mean that the materials have changed, the water content is varying, or the mix proportions have been inadvertently modified. The test specimen is formed as a truncated cone with a lower base of 200 mm (8 inches) in diameter, the upper small base 100 mm (4 inches) in diameter and the height 300 mm (12 inches). The mould is provided with foot rests and handles, as shown in Figure 2. A tamping rod is also used and is 16 mm in diameter and 600 mm long with a rounded end.

The concrete mix sample should be representative of the batch. For samples having aggregate exceeding 37.5 mm in size, the pieces of aggregate larger than 37.5 mm are removed.

PLATE 8.1
The slump test

The inside of the mould should be cleaned before each test. The mould should be dampened and placed on a flat, wet, non absorptive surface, where the operator holds it firmly in place by standing on the foot rests while it is being filled. The mould is filled in four layers, each approximately representing one-quarter of the height of the mould. In placing each scoop of concrete, the scoop is moved around the top edge of the mould to ensure symmetrical distribution of the concrete mix within the mould. Each layer is rodded with 25 strokes of the tamping rod, using the rounded end. The strokes are distributed uniformly over the cross section of the of the mould. The bottom should just penetrate into the underlying layer.

After the top layer has been rodded, the surface of the concrete is struck off level so that the mould is exactly filled, and the spilled concrete cleaned from the base. The mould is immediately removed from the concrete by raising it slowly and carefully in a vertical motion. The slump is measured immediately by determining the difference between the height of the mould (300 mm) and the maximum height of the concrete after subsidence. If the sample collapses or shears off laterally the test should be repeated. If the same thing happens the slump should be recorded and the collapse or shear noted on the test sheet.

After the slump measurement is completed, the side of the concrete cone should be tapped gently with the tamping rod. The behaviour of the concrete under this test is an indicator of its cohesiveness, workability and placeability. A well-proportioned, workable mix will slump gradually and retain its original identity, while a poor mix will crumble, segregate and fall apart.

Compressive strength tests on test cubes

Compressive strength tests are normally carried out on 150 mm cubes. The moulds are made of steel or cast iron with parallel inner surfaces, machine finished. Timber moulds should not be used. Each mould has a metal base plate to support the mould and prevent leakage. The mould and base-plate should be cleaned and lightly oiled after each test. The rammer is a steel rod 380 mm long, weighing 1.8 kg and having a ramming face 25 mm square. The mould should be filled in three equal layers and each layer should be rammed with at least 35 strokes of the rammer. The ramming should be evenly distributed over the cross-sectional area of the cube and should be continued regardless of the number of blows until the layer has been fully compacted. The surface should then be trimmed flush with the top of the mould with a trowel.

The test specimens should be kept at a temperature of between 15^0 and 25^0C under damp matting for between 16 and 24 hours from the time the water was added to the mix. After this initial period the specimens are labeled and the moulds are removed. The specimens are immersed in clean water maintained at between 18^0 and 22^0C. Once the specimens are between 3 and 7 days old they should be wrapped in damp sacking for transporting to the testing laboratory where they should again be immersed in water until testing is carried out.

The cube should be tested immediately after removal from the water, and the surface should be cleaned of surface water and other debris. The axis of compression in the compression test machine should not be through the top and bottom of the cube as cast. The load should be applied without shock at a continuous rate of 15 N/mm^2 per minute until failure. The maximum load at failure is recorded and the type of failure recorded.

Site practice

Storage

Each of the constituent materials in concrete - the cement, the aggregates and the water - should be stored and kept in good condition so that the concrete produced from them is of good quality.

Aggregates should be checked before storage. They should be visually assessed as being of the right general size and type and as being clean. The presence of clayey or silty fines can be detected by rubbing the aggregate in the hands. It is preferable to store the aggregates on a hard base slab so that contamination from the underlying soil is avoided. It is also preferable to have a slight slope to the base so that water can drain away easily, and to keep the site in the open and not under trees where organic debris can contaminate the material. Even so, if the aggregate is open to the weather percolating rain water will wash any fines towards the base and the bottom 200 mm or so should not be used.

Bags of cement should be neatly stacked in a shed out of the weather. Piles of bags should not be more than, say, 8 to 10 bags high, and they should be used in date order, i.e. the first bags into the shed should be the first bags to be used. Cement usually stays in good condition for about 6 to 8 weeks. If it has become lumpy it should be discarded unless the lumps can still be powdered in the fingers.

Batching

The materials should always be proportioned on the basis of their weight. However, on rural sites this may not be feasible and proportioning by volume is certainly more practicable. It should be recognised that batching by volume will lead to inconsistencies. For example, a damp sand may bulk and a shovelful of damp sand may contain 30% less sand by weight than the same shovelful of dry sand.

If the materials are mixed by hand it is preferable to mix them in small quantities, e.g. by the barrow load. Each barrow can have the dry constituents added in consistent measure for transportation to the mixing site. To keep the barrows reasonably clean add the coarse aggregate first, then the cement, then the fine aggregate. The cement is prevented from being blown in the wind because it is sandwiched, and the coarse aggregate at the bottom will help to scour the barrow when the mix is tipped out. The dry constituents should then be mixed at the mixing site before the water is added.

Mixing

The duration of the mixing depends on the type of the mixer. For a mixer with a horizontal axis the time should be about 1 minute or 20 revolutions. For a tilting drum mixer the time should be about 2 minutes or 40 revolutions. If the diameter of the mixer is more than 1m the above times should multiplied by

$$\sqrt{D}$$

where
D is the diameter of the drum.

Curing

Once placed the concrete should be properly cured in order to ensure its strength and durability. Evaporation will take place at the surface of the concrete and if it is not kept moist or protected from evaporation shrinkage and cracking may occur. In hot weather hessian sacking should be kept wet and laid over the concrete surface, but only once it has surface hardened.

Chapter 9

Maintenance of small dams

Local people participation

Damage is most often caused by either high runoff or the passage of cattle across the earthfill structures. However, experience has shown that in remote rural areas it is unlikely that damaged small scale hydraulic structures will be repaired promptly due to a lack of necessary resources, organization, personnel, etc.

The involvement of the local population in management and maintenance is then of prime importance for the efficient, continuous and long term operation of small hydraulic structures. If damage is left unrepaired, each subsequent flood increases the damage and the probability of a major structural failure becomes higher. Therefore, responsibility for structure maintenance falls primarily on its direct beneficiaries. However, the local population usually has limited resources and they can assume effectively the responsibility of ordinary maintenance tasks only. They cannot usually afford to pay for interventions which require significant engineering input, this is needed when a hydraulic structure is seriously damaged, by an exceptional flood for example, and thus generally requires expensive interventions of extraordinary maintenance to be financed by the public institutions.

Management

Hydraulic structure management concerns the measures to be taken in order to ensure a smooth functioning and utilization of the structure, aimed at minimizing maintenance requirements. For example, in order to protect a storage dam constructed in a zone where pastoralism is the dominant agricultural vocation, dedicated paths should be traced and improved for the easy access of animals to the reservoir. In doing so, cattle passing across the dam and the gabion structures is avoided, which could otherwise be damaged. The transit of vehicles and heavy trucks on the earthfill and gabion structures, which could cause breakage in the weir, should also be avoided. Areas adjacent to the earthfill should not be cultivated as the agricultural exploitation of these areas may lead to damage of the rip-rap and the onset of erosion. Hunters should be kept from opening the gabions and lighting fires in order to catch small wild animals which sometimes nest inside the gabions.

Often, in earth dams, clear water seeping through or immediately downstream of the embankment is used for human needs. However, digging of water holes and wells in the immediate vicinity of the earthfill should be prohibited because this will shorten seepage paths and increase the flow rate. In these circumstances it is recommended that a system is constructed for the collection of seepage water downstream of the earthfill.

Maintenance organization

Periodical checks of the dam condition, particularly after important flood events, should be performed as a routine, to make sure that major damage has not occurred. These checks are within the capability of the local population, as it does not imply significant financial resources, but only a certain degree of motivation and organizational skill. These ordinary maintenance tasks should be entrusted to a properly trained group of local people, capable of identifying damage and eventually carrying out small repairs. Once damage has been identified, the local team will establish whether the necessary repair can be carried out locally, or if external support is necessary.

It is preferable to select the local management group during the initial stages of surveys and construction of the structure. Once the group members have been selected, they should receive appropriate training in the activities that they are expected to carry out. It is important that training takes place during the construction phase, when the members of the group will learn how the structural elements are built. Thus, they will acquire a practical knowledge of the techniques they will have to reproduce in the course of their future maintenance role. It is also important that they are directly involved in the construction of the hydraulic structure.

In order to raise sufficient funds for extraordinary maintenance when it becomes necessary, the direct beneficiaries of the scheme should pay some form of regular contribution or taxation. Obviously, these arrangements should take into account the local economic context. Several approaches can be considered, but the final decision should be left to the discretion of the dam users:

- a small sum should be paid by herders for each animal watered at the reservoir;
- a charge should be paid by the farmers irrigating their fields with water from the reservoir in proportion to the irrigated area.

In this way, a fund could be established and important maintenance tasks could be autonomously financed by the local population. It would be possible, for instance, to acquire gabions or cement to accomplish periodical and extraordinary structure repairs.

Maintenance of earth structures

Vegetation growth

Growth of shrubs and trees on the earthfill embankment should be avoided as roots tend to reach the humid zones and therefore extend toward the reservoir. If the tree or shrub then dies, its roots will rot or be eaten by worms and insects. This creates empty channels through the earthfill in which water would penetrate, thus modifying the normal seepage regime through the earthfill. These channels may siphon water, progressively increasing their diameter and eventually leading to local or general collapse of the dam.

Rip-rap maintenance

The good condition of the rip-rap which is a key measure against erosion may be threatened by the passage of cattle and/or erosion provoked by the action of waves in the reservoir. Rip-rap should be constantly checked because unprotected earthfill areas are particularly prone to erosion.

Small repairs

Small repairs can be easily carried out without use of mechanical equipment. This kind of intervention is rather modest, of the order of a few cubic meters of material to move. The tools required for small maintenance works are very basic: a vehicle to carry building materials is usually necessary, like a small cart. A number of manual tools are also needed, such as spades, axes, buckets and small tampers for preparing construction materials, loading, transporting and placing them. Jute or plastic bags, often easily available locally, might also be required for urgent repairs of damaged geotextile.

Erosion

Whenever portions of the earthfill are eroded by the action of waves, rain water or by the passage of cattle, it is necessary to intervene quickly in order to re-establish the original shape of the earthfill. This is a simple intervention, consisting of bringing back the removed material and placing it in superimposed layers. Each layer will have to be adequately prepared, watered, and compacted, before the following layer can be laid upon it. Layers should not be thick, so that a good compacting effect can be achieved with the manual tools to be employed. In order to achieve a good bonding between the pre-existing earthfill and the new layers added to repair eroded parts, these should be properly prepared in advance: cut in horizontal steps, unevenness removed and the surface must be moistened and compacted.

Repair of cracks

Sometimes cracks appear in a earthfill dam . There are two types of cracks depending on their orientation in relation to the embankment axis, either perpendicular or parallel. These cracks usually indicate differential settlement between the earthfill and the foundation layer. In particular, perpendicular fissures (fig. 9.1), usually near the earthfill extremities, indicate a differential settlement between the earthfill and the foundation layer. This phenomenon generally takes place at one extremity of the earthfill where it is founded on a soil that is more resistant than that in the center portion of the dam. To produce this kind of crack, the shoulder is also characterized by a significant slope. On the contrary, longitudinal fissures are commonly generated by the earthfill slope instability (fig. 9.2). This phenomenon may be restricted to the earthfill alone or may extend deeper into the foundation layer.

FIGURE 9.1
Crack perpendicular to the earth-fill

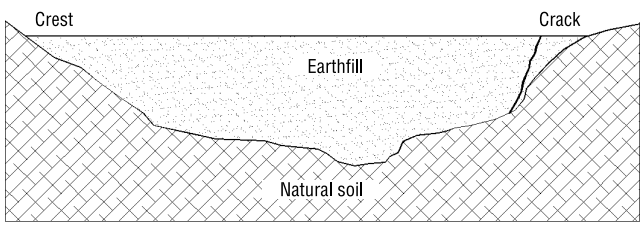

Both types of cracks tend to occur during the initial period of the structure, typically within two years of completion of the construction. For the first type of crack, the ground settles due to the settlement process of the clay component in the foundation layer. A high clay content in the earthfill will also contribute to this situation. In the second type, slope instability is usually provoked by the presence of ground water, being the consequence of the earthfill saturation after the filling of the reservoir.

FIGURE 9.2
Longitudinal crack through the earth-fill

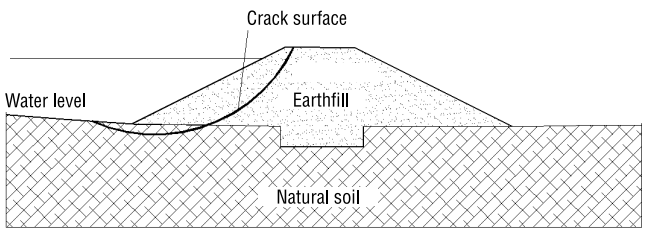

A perpendicular crack may establish a preferential path for seepage water across the structure, with the consequent risk of degenerative seepage. For this reason it is important to take notice of this phenomenon, as soon as it occurs, especially if it is followed by significant seepage. However, for small structures, the whole earthfill generally maintains a high degree of plasticity, and its height is limited, so that the crack tends to close up and the embankment to seal again. While the crack is likely to be closed towards the base and in the inner part of the earthfill, it shows at the surface and on the crest. If such is the case, the outer layer forming the crack should be removed down to the crack origin in the earthfill. Then, the interior layer of the excavation is compacted, and filled with successive layers of compacted earthfill.

A longitudinal crack in the earthfill, probably caused by slope progressive instability, may be subject to further slippage along the circle of slippage (fig. 9.3). The earthfill section is then becoming instable and needs to be amended: an earthfill berm should be constructed at the embankment toe, or the earthfill slope itself can be corrected with the construction of an earthfill shoulder with a lesser slope.

FIGURE 9.3
Methods for stabilizing a cracked earthfill

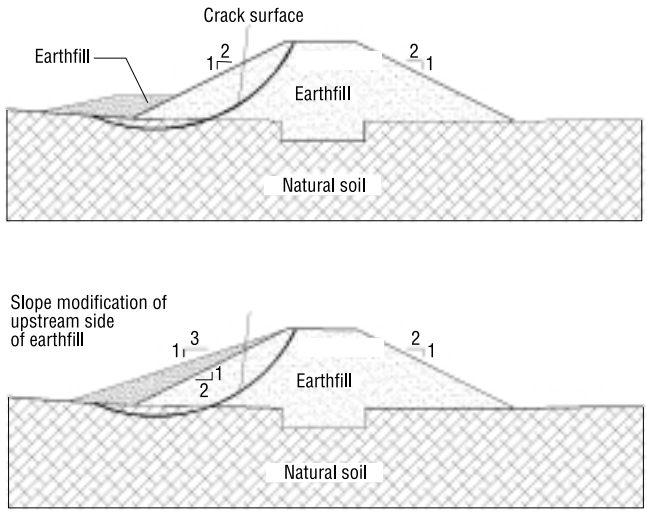

MAINTENANCE OF GABION STRUCTURES

The most common damage occurring in gabion structures is the opening of the gabion baskets. This can occur with the continuous abrasion of materials carried by flowing water (e.g. sand, gravel and stone) against the iron wire. When it breaks or if the basket opens, the stones become loose, and the structure loses its shape and rigidity and consequently its function. It should be noted that gabions may even empty without breaks in the baskets. If the impact of the water flow is particularly violent and the stones are fragile (e.g. laterite) the stress against the gabions can provoke shaking and abrasion of the stone inside the gabions, that will progressively start to crush into pieces small enough to be lost through the gabion net openings.

It is necessary to repair the gabions as soon as possible. The baskets should be opened, and the material inside should be completely removed. They should be filled again with new material according to the procedure described in Chapter 7 and then closed again, using the appropriate tools.

PLATE 9.1
Settlement damage to gabion structure

If appropriate precautions to prevent water flowing at the interface between the gabions and the natural soil or earthfill have not been taken or if the appropriate protection methods have not been accurately applied, some soil of the interface may be eroded and could cause the failure of the gabion structure (Plate 9.1 and 9.2). In this situation, a part of the structure settles into a new shape at a lower level. In order to remedy this damage, two methods can be applied: the first method involves restoring the gabion weir to its original shape by placing other gabions on top of the settled part. This is the method preferred especially if the gabions have settled into a stable position. It is also important to eliminate the cause of the settlement (e.g. excessive water flow in the contact area between gabions and earth), by adding semi-permeable or impermeable cut-offs.

Alternatively, if the new shape taken by the structure after its initial settlement is subject to continuing instability, it is preferable to substitute the damaged structure with a new one.

PLATE 9.2
Scour damages to gabion structure

Bibliography

AASHTO. 1983. Standard Specifications for Transportation materials and Methods for Sampling and Testing. 13th Edition. T191 61, Standard Test Method Density of Soil in Place by the Sand Cone Method. American Association of State Highway and Transportation Officials, Washington, D C.

ASTM. Annual Book of ASTM Standards. Section 4 Volume 04.08: Soil and Rock; Building Stones. D1556-82, Standard Test Method Density of Soil in Place by the Sand Cone Method. American Society of Testing and Materials, Philadelphia, USA.

Bedient, P., Huber, W. 1987. Hydrology and floodplain analysis. Addison-Wesley Publishing Company

Bishop, A.W. and Morgenstern, N. 1960. Stability Coefficients for Earth Slopes. Geotechnique Volume 10 No 4, pp 129-150.

Caroni, E., D'Alpaos, L., Fattorelli, S., Rossi, F., Ubertini, L., Versace P., Marchi E. 1982. Dinamica Fluviale, Valutazione delle piene. CNR No 165.

Clayton, C.R.I., Simons, N.E. and Matthews, M.C. 1982. Site Investigation. Granada Technical Books, Granada Publications, London.

Chow, Ven Te. 1964. Handbook of Applied Hydrology. McGraw-Hill.

Chow, V.T., Maidment, D.R., Mays, L.W. 1988. Applied Hydrology. Singapore. McGraw Hill

FAO. 1981. Arid zones hydrology. Jones K.R., Berney O., Carr D.P. and Barret E.C. FAO Irrigation and Drainage Paper No 37. Rome

FAO. 1992. Cropwat. Smith, M. FAO Irrigation and Drainage Paper No 46. Rome

FAO. 1996. Crues et apports. FAO Irrigation and Drainage Paper No 54. Rome

FAO. 1998. Crop evaporation. Allen, G.A., Pereira, L.S., Raes, D. and Smith, M. FAO Irrigation and Drainage Paper No 56. Rome

Fiorillo, G. 1993. Appunti di lezioni di idrografia e idrologia, Elaborazioni statistico-probabilistiche.

Fortier, S. and Scobey, F.C. 1926. Permissible canal velocities. Transactions, American Society of Civil Engineers, vol 89.

Holtz, R.D. and Kovacs, W.D. 1981. An Introduction to Geotechnical Engineering. Englewood Cliffs, Prentice Hall.

Holz, R.D. 1988. *In: Geosynthetics for Soil Improvement.* Proceedings of the Symposium, Nashville, Tennesee. ASCE Geotechnical Special Publication No. 18. American Society of Civil Engineers, New York.

Lane, E.W. 1955. Design of stable channels, Transactions, American Society of Civil Engineers, vol 120 .

Linsley, R.K., Kohler, M.A. and Paulhus, J.L.H.1958. Hydrology for engineers. McGraw-Hill,

Maccaferri. 1990a. Opere trasversali per sistemazioni idrauliche e derivazioni. Bologna. Italia

Maccaferri. 1990b. Rivestimenti flessibili in materassi Reno e gabbioni nei canali e nei corsi d'acqua canalizzati. Bologna. Italia.

Maccaferri. 1990c. Principali istruzioni sulla posa in opera dei prodotti Maccaferri. Bologna. Italia.

Maione, U. 1995. Le piene fluviali. Padova. Italia. La Goliardica Pavese

Mc Cuen, R.H. 1989. Hydrologic analysis and design. Prentice Hall.

Moisello, U. 1985. Grandezze e fenomeni idrologici. Padova. Italia. La Goliardica Pavese

PAP/RAC. 1997. Guidelines for mapping and measurement of rainfall-induced erosion processes in the Mediterranean coastal areas. Griesbach, J. C., Ruiz Sinoga, J. D., Giordano, A., Berney, O., Gallart, F., Rojo Serrano, L. and Pavasovic, A. Split.

Peyras, L., Royet, P., Degoutte, G. 1991. Ecoulement et dissipation sur les deversoir en gradins de gabions. RGE. La houille blanche. No 1/1991.

Réménieras, G. L'hydrologie de l'ingénieur. Eyrolles, 1972.

Roche, M. 1963. Hydrologie de surface. Paris. Gauthier Villars Editeur

Rodier J., Ribstein, P. 1988. Estimation des caracteristiques de la crue decennale pour les petits bassins versant du sahel couvrant de 1 ˆ 10 km2. Montpellier. France. ORSTOM

Schwab, G.O., Frevert, R.K., Edminster, T.W., Bornes, K.K. 1992. Soil and water conservation engineering. John Wiley & Sons

Tonini, D. 1983. Elementi di idrografia ed idrologia. Padova. Italia. Edizioni Libreria Cortina.

United States Army Corps of Engineers PROSPECT Training Course. 1994. Streambank erosion and protection. Gabions structures for streambank erosion protection.

United States Department of the Interior Bureau of Reclamation. 1987. Design of small dams. Washington, DC.

Weltman, A.J. and Head, J.M. 1983. Site Investigation Manual. CIRIA Special Publication 25. Construction Industry Research and Information Association, London.

Annex 1

Case study: Hara Irrigation Scheme: Reconstruction of headworks - gabion weir

Background

Hara irrigation scheme was the first formal irrigation scheme to be developed in Malawi. The scheme is located along the northern shores of Lake Malawi, some 75 kilometres south of Karonga (Figure A1.1). The scheme was constructed between 1968 and 1970, with the objective to stimulate the production of rice from irrigated land. It comprises a net irrigable area of 193 hectares. The scheme has been fairly successful in terms of production, but since its inception there have been a number of technical problems, especially with the headworks, often resulting in shortage of water supply to the scheme.

Figure A1.1
Malawi

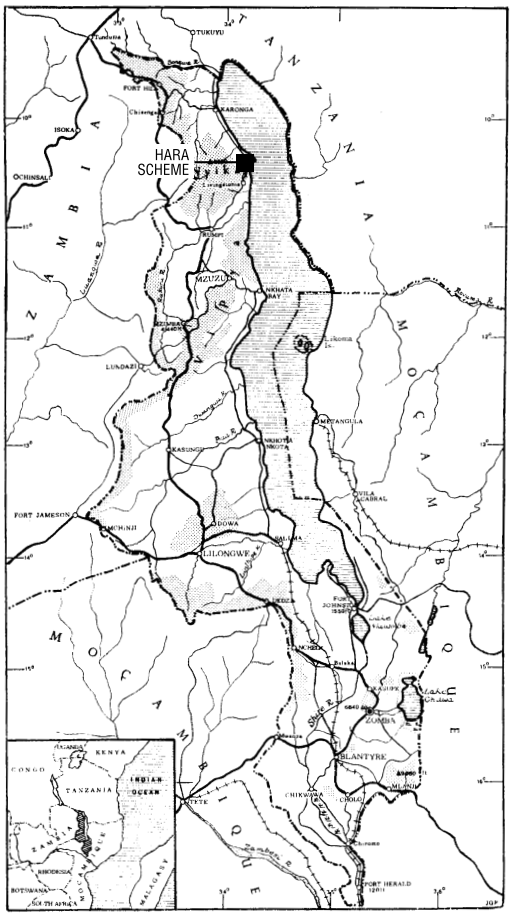

The headworks site was selected at a too low level in relation to the scheme. As a result there was a considerable head on the weir, in order to achieve the correct command level for the conveyance canal. River instability has been a major problem, which has been costly to counteract. The original headworks have been extended several times. The final extension was made with gabion baskets, which are described in detail in this case study. The new gabion weir has increased the diversion efficiency to nearly 100 percent during the dry season and thereby enabled an increase in cropped area. Furthermore the danger of floods bypassing the completed headworks is now very small.

History of the headworks

Irrigation water for the scheme is abstracted under gravity from the perennial Hara river. The original headworks were constructed at the time when the scheme was under construction. It consisted of a 5.50 metre wide and 1.37 metre high spillway channel equipped with steel radial gate and an intake with 3 circular openings of Ø 0.40 metre

fitted with sliding gates. The design intake capacity was 0.425 cubic metres per second. Figure A1.2 shows the plan of the headworks before the construction of the gabion weir. The spillway channel is located at the northern part of the structure.

FIGURE A1.2
Existing situation before construction of gabion weir

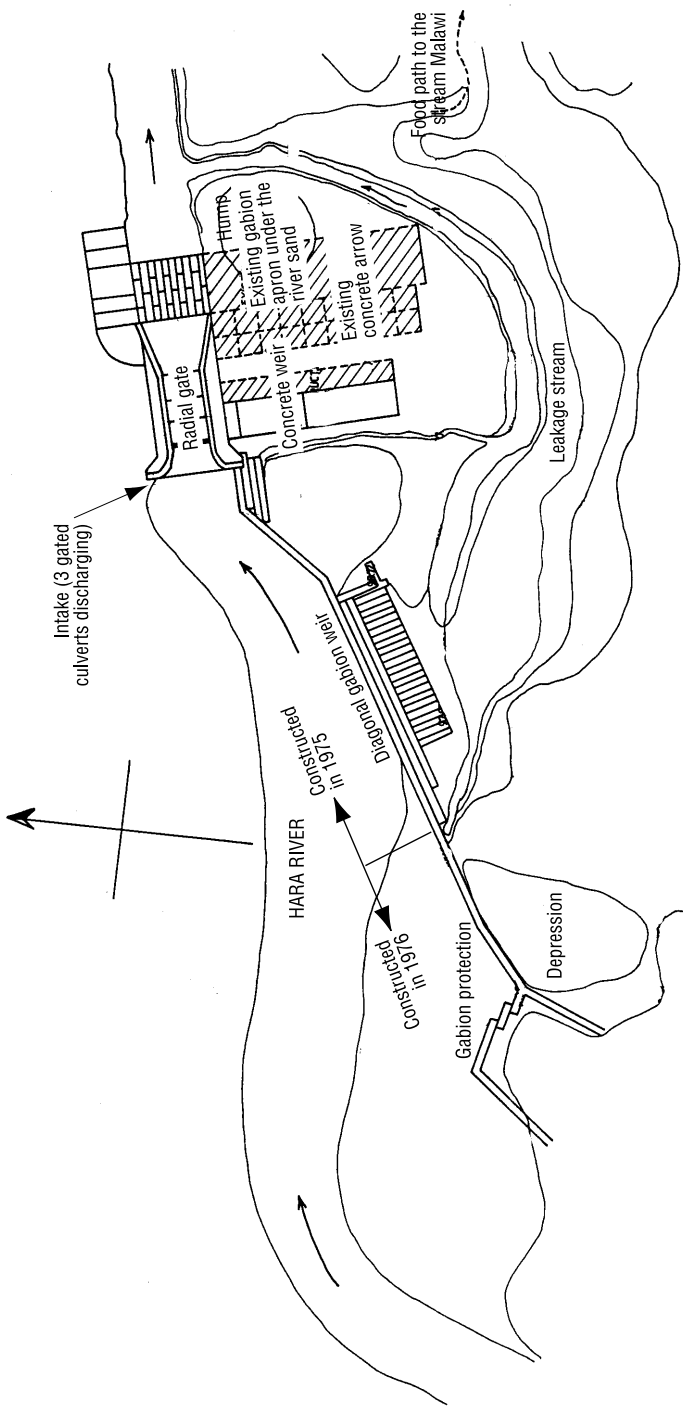

The Hara river has always been subject to high floods. However, at the time of design of the scheme, little was known about the flood regime in the river. As a result the spillway was not designed for actual large floods. Furthermore the headworks had been constructed in an alluvial

FIGURE A1.3
Plan of the completed headworks

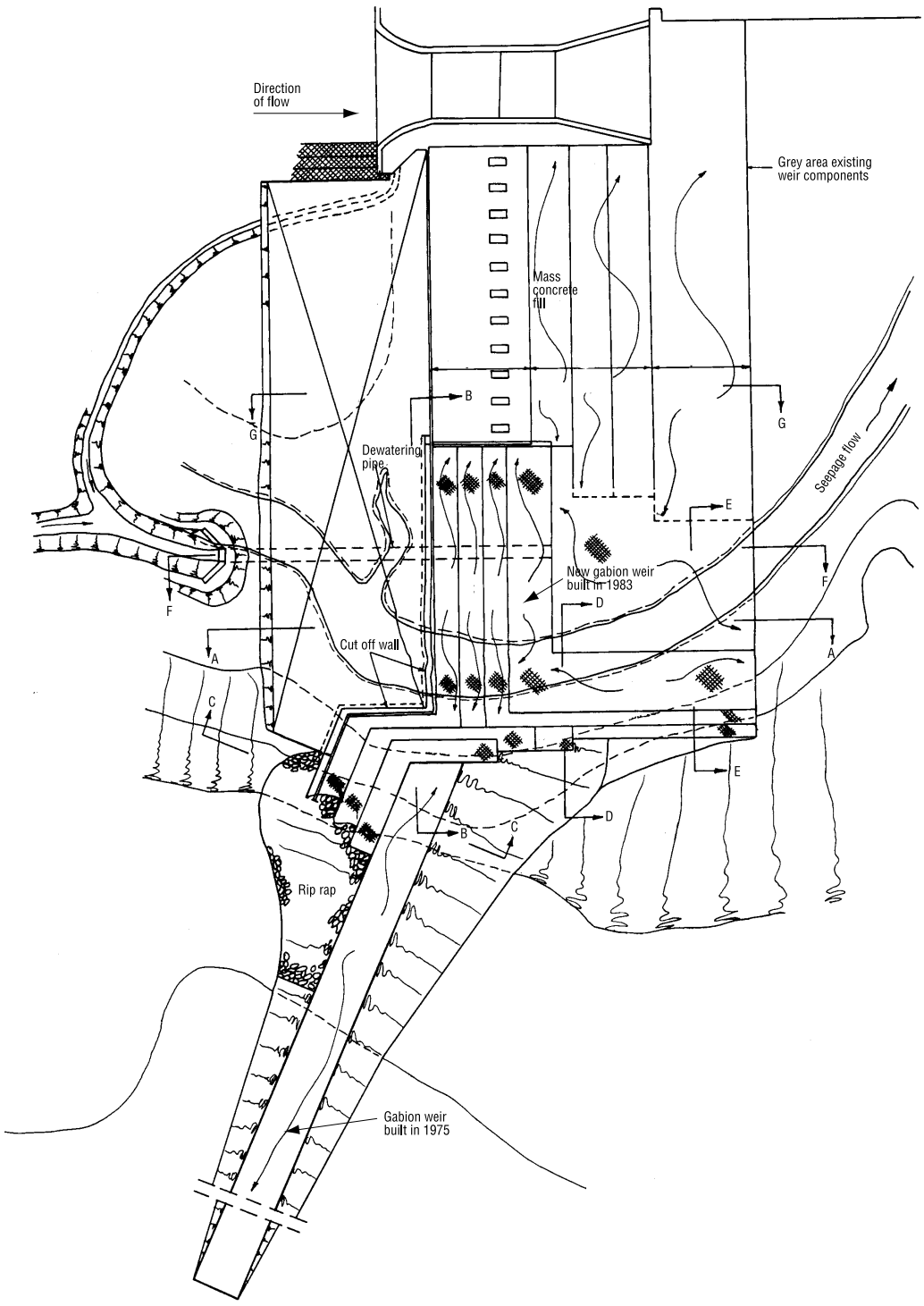

plain, comprising abandoned river beds near the banks of the river where the structure was located. These old river beds were filled up with silt and covered with vegetation, but still very susceptible to floods. Already during the first year of operation of the scheme high floods in the river outflanked the structure on the right bank. In order to avoid further bypassing of the headworks and to direct the flow to the intake, several stake weirs were built between 1971 to 1975. These weirs were not very effective and were often damaged by floods, sometimes so seriously that water diversion into the scheme was totally interrupted, leading to heavy crop losses. In 1975 a gabion weir was constructed diagonally across the river to replace the stake weirs (see Figure A1.2). It was hoped that it would reduce the leakage losses of the stream that bypassed the spillway (this stream was formed during previous floods). However, the new weir was excessively permeable because it was not sealed off effectively on its upstream side. Thus the scheme continued to suffer from water shortages as further floods outflanked the weir again, which was subsequently extended several times in 1976 and 1977, including some river training groynes. Despite this, the water situation in the scheme did not improve, as none of the structures was able to adequately direct the river water to the intake structure.

In 1977 the construction of a new permanent concrete weir started. However, foundation and other construction problems were encountered and funds were not adequate to meet the escalating costs. The project had to be left unfinished in 1979 due to lack of funds, with most of the weir and the apron completed (see Figures A1.2 and A1.3). The next floods in 1980 opened up a further gap to the right of the unfinished concrete weir.

In 1980 a survey of the foundation conditions concluded that the bearing capacity was good, but that the foundation materials would allow seepage and would therefore be liable to piping. On the basis of the survey a design was prepared and included the use of sheet piling for a cut-off wall in front of the concrete weir. A massive wingwall with additional gabion protection, back fill of the right river embankment and an earthen embankment with rip rap protection would complete the structure (see Figure A1.4). Because of the high estimated construction costs of about $187 000 for this design, funding could not be obtained for this project and therefore it was shelved.

Because large amounts of money had already been spent on the headworks between scheme inception in 1970, yet the scheme was still suffering from water shortages and the project was taken up again in 1982. However, a new design had to fulfil a number of important conditions:

- it should avoid the use of sheet piling as there was no adequate equipment and skill in the country,
- the costs for the structure should be reduced considerably in order to make it acceptable for funding, and
- all seepage water through the existing diagonal weir should be to collected and used for irrigation.

The revised design for completion of the headworks included the use of local materials and local unskilled labour as much as possible. This was done, however, without affecting the safety and function of the structure. It was decided to opt for a gabion weir, because:

- sufficient quantities of good quality and good sized stones were found near Lake Malawi, within a distance of 20 kilometres from the project site,

FIGURE A1.4
Proposed design for headworks completion with sheet piling and abutment

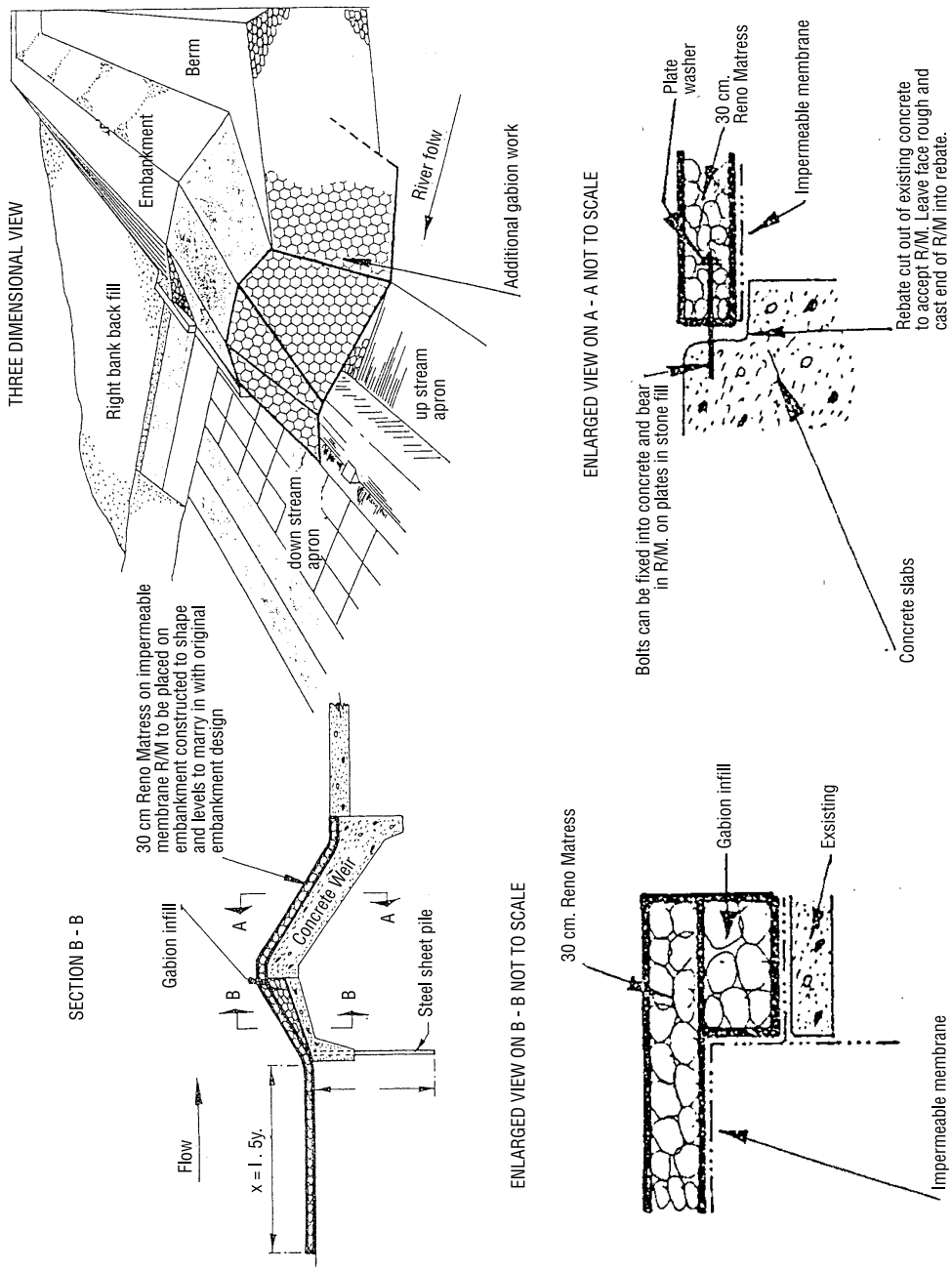

- the construction of a gabion weir was labour intensive and did not need much skilled labour. The cost of labour in Malawi was cheap and a large potential unskilled labour force was present in the project area, and

- gabion baskets, Geotextile (felt) filter, impermeable plastic sheets, etc. were readily available in the country.

Design aspects of the gabion weir

The concept of constructing a massive abutment with protective works and refill of the river embankment was dropped. Instead it was opted to extend the unfinished concrete weir by a gabion weir with a crest length of 23 metres. Figures A1.3 and A1.5 show respectively the plan and the downstream view of the complete headworks, while Figure A1.7 shows a typical cross-section of the gabion weir. The crest elevation of the gabion weir was selected 0.5 metre higher than the crest of the concrete weir. As a result all river discharges up to 40 cubic metres per

Figure A1.5
Headworks viewed from downstream

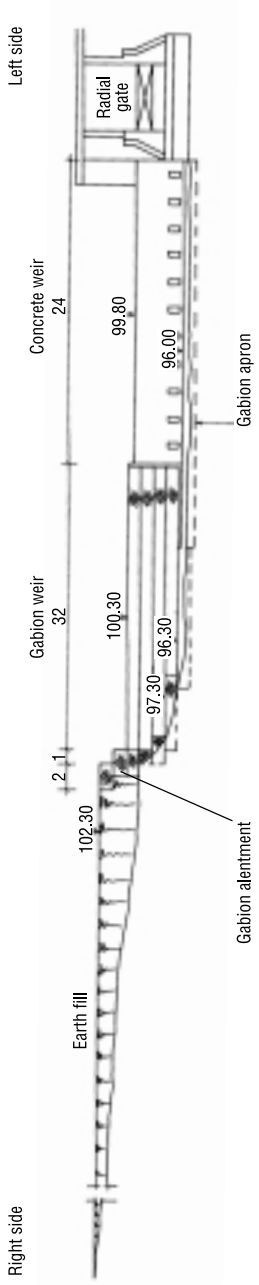

Figure A1.6
Typical cross-section through the gabion weir

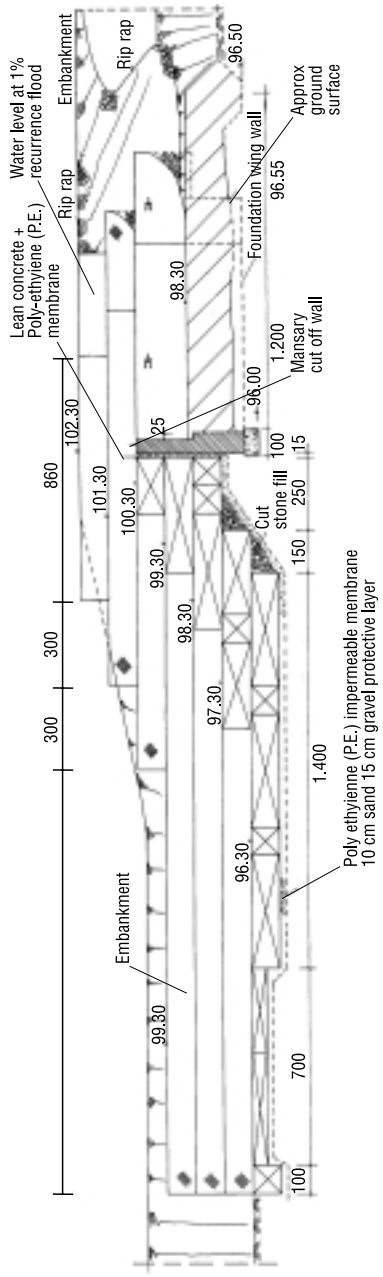

second, which constitutes the majority of the river floods, would be passed through the spillway opening and over the concrete weir. Thus wear and tear (abrasion and subsequent corrosion) of the gabion baskets would be less. Therefore concrete grouting of the gabion surfaces was not included in the design. An added advantage of the extended weir would be that the water depth over the weir would be reduced with 0.52 metre only for the 1 in 100 year design discharge.

In order to preserve as much water as possible for diversion into the scheme, the weir had to be designed water tight on the upstream face. It was planned to place a polyethylene impermeable plastic with a thickness of 375 micron and a 0.15 metre thick concrete wall between the upstream face of the gabion structure and a protective brickwall (see Figure A1.6). This brickwall would not only act as a form work, but would also give protection to the concrete and the PE plastic. The brickwall would be stable against upstream water pressure, because it was leaning against the gabion weir, of which it should be considered an integral part. As the gabion weir would settle, the brickwall was also expected to settle and thus be subjected to some cracking. The expected cracking should, however, not considerably reduce the protective function of the wall. Between the existing concrete weir and the proposed gabion weir the PE plastic would end in a 0.15 metre slot, which would be filled with concrete. This concrete would extend 0.75 metres above the concrete weir, so that it would serve as a guiding wall for low floods.

Energy dissipation was accomplished through 4 cascades of 1 m high gabion baskets and an apron, also made up of gabion baskets. The thickness of the apron was designed such that the structure would be safe against uplift pressure.

Instead of the sheet piling, another solution was found to prevent the risk of piping. Horizontal impermeable layers, both upstream and downstream of the gabion weir, were included in the design (see Figures A1.3 and A1.6). These layers would not only eliminate the risk of piping, but would also reduce seepage losses. A layer of well compacted locally available clay with a minimum thickness of 1 metre and a length of 12 metres was proposed for the upstream side of the weir. The length of the layer was calculated with Lane's weighted-creep theory. This is an empirical, but simple and proven method, generally used to design weir floors. Under the gabion structure the 375 micron polyethylene plastic sheet was proposed as impermeable membrane. The membrane would be placed on a carefully prepared bed of sand - cement mixture. The procedure for this method would be:

- place the polyethylene plastic on a well prepared soil bed,
- spread a 0.25 metre thick beach sand layer on top of the plastic,
- mix the upper 0.10 metre of the sand layer with 10 percent by volume of cement. This cement should be spread with harrows, while water should be applied when still mixing,
- the mixture should be well compacted, preferably with a small roller or by hand with rammers, and
- proper curing should take place to minimize shrinkage cracking.

Construction of these layers had to be done very carefully as it was absolutely necessary to provide a tight sealing.

A weir abutment with gabion baskets was designed for the right river bank (see Figures A1.3, A1.5 and A1.6). The top elevation of this abutment was such that there would be a 0.60 metre freeboard at the 1 in 100 years design flood of 230 cubic metres per second. Adjacent to the abutment an earth embankment would be constructed up to the same level. The embankment

would be built up with well compacted clayey soil. The upstream part of the embankment closest to the river would be protected with rip-rap, while the rest of the embankment would be grass covered. A geotextile (felt) filter and a 0.25 metre thick gravel layer was proposed between the gabions of the abutment and the embankment.

A dewatering facility had to be included in the design in order to discharge any seepage water flowing through the diagonal weir across the construction site into the river downstream of the apron. A 0.60 metre diameter culvert was proposed, which would be sealed off with concrete after completion of the construction works.

During construction the design as described in the foregoing paragraphs had to be adjusted several times because of unforseen problems, especially with the foundation and seepage.

The design was costed at US$ 102 000 (1983 prices), which was approximately half of the previous design to complete the headworks. The investment in completing the weir would increase the water availability during the dry season. During the rainy season it would eliminate the risk of structural failure due to floods and piping, which in turn would have meant that at least part of the scheme would be out of production. These benefits were not only of economic importance, but also of social significance as they would affect approximately 400 farm families. Requested funds were made available for the construction of the gabion weir.

Construction aspects

The construction of the gabion weir had to be done during a relatively short period. It was necessary to complete the entire structure within one dry season, as it was feared that floods could destroy an unfinished structure. Actual construction was therefore confined to the period from June to November, when river discharges is low and no floods are to be expected. Proper planning was important to ensure that all necessary equipment and materials were on site before the actual construction started.

Works started in February with the collection of stones, sand, gravel and bricks. All these materials were collected within the vicinity of the project area (30 to 40 kilometres). A total of 35 unskilled labourers, 1 foreman and 2 lorry drivers were used for this collection during 80 working days. The quantities collected were:

- 1200 cubic metres stones,
- 100 cubic metres sand,
- 300 cubic metres gravel, and
- 30 000 bricks.

Materials purchased in the capital Lilongwe were also transported to Hara. These included:

- 1061 bags (50 kilograms) of cement at $15.90
- 4 rolls of polyethylene plastic (6 metres width * 30 metres length each) at $398
- 8 rolls of black impermeable plastic (4 metres width * 30 metres length each) at $150
- 2 rolls of geotextile filter (6 metres width * 30 metres length each) at $270
- galvanized heavy duty steel wire gabion baskets of the following sizes (dimensions in metres):

3 x 1 x 0.50	15	Nos
4 x 1 x 0.50	15	Nos
2 x 1 x 1	100	Nos
3 x 1 x 1	73	Nos
4 x 1 x 1	150	Nos
Total	**353**	**Nos**

corresponding to 1072 cubic metres at a total cost of $21 960

The actual works on site started in June and were completed in November of the same year. During this construction period the skilled labour force consisted of:

- 2 - 4 drivers,
- 3 - 8 operators,
- 2 - 4 bricklayers,
- 1 - 3 mechanics, and
- 1 carpenter.

The unskilled work force averaged 90 during this period, supervised by 3 foremen.

Site preparation started with the cutting of access roads through the river on the downstream end of the headworks. A bulldozer was engaged to clear accumulated soil and considerable vegetation on the whole work site. Stripping upstream of the concrete weir was also done. The seepage water through the diagonal gabion weir was collected and diverted through a hand-dug channel, located on the right side of the river. Already at that point in time it became clear that there was much more seepage flow than expected.

After the site preparation, the first task was to complete the apron downstream of the existing concrete weir. Approximately 85 cubic metres of mass concrete had to be placed. During excavation of this apron part, a localized and heavy seepage flow appeared. Therefore a dewatering well had to be installed, using large culvert rings. The concreting had to be done under almost continuous pumping, due to this inflow of water under pressure. The dewatering well was finally plugged with concrete.

After completion of the existing apron, the next activity was the excavation for the foundation of the gabion weir (Plate A1.1). This work caused great difficulty due to extremely bad soil and seepage conditions. Excavation works with the bulldozer had to be stopped. The seepage flow through the diagonal gabion weir had to be reduced in order to work on the site.

Despite sealing of the diagonal weir, there was still a considerable seepage when the excavation of the construction pit continued. This also meant that careful and complete sealing off by the plastic membrane and the clay layer upstream of the structure was necessary.

An alteration to the foundation design was yet again called for, as it would have been impossible to place the base layer of gabions as originally planned. Instead of a sand - gravel base layer on top of the impermeable polyethylene membrane a concrete - cum - sand layer was placed. First of all rows of grain bags, filled with sand, were placed on the soft clayey silt of the foundation. This not only gave a more or less firm bottom layer for the gabion baskets, but also allowed reasonable access in the construction pit. After that the impermeable polyethylene plastic was

laid on top of these grain bags and rows of grain bags filled with sand were put on top of the plastic membrane, leaving gaps of between 0.15 and 0.20 metre (Plate A1.1). A concrete layer, using small gravel only and a strong mix of 1 : 2 : 3, of about 0.20 metre thick was poured in between and on top of the grain bags. It was not possible to glue the sheets of plastic together, but a large overlap of at least 0.50 metre and the concrete layer guaranteed a proper sealing of the layer. It was made sure that there were no grain bags below and above the plastic membrane where they joined. Thus the plastic joints were embedded in concrete.

PLATE A1.1
Laying plastic sheet on top of sand filled bags

The gabions were directly placed on top of this base layer and filling started. Initially a close supervision was needed during this activity. Not only the plastic membrane was critical for the structure, but also the placing and filling of the gabions had to be done very well to avoid structural failure of the gabion weir due to poor quality. Initially some baskets were poorly packed, with the stones just thrown in and not graded. This was not only caused by lack of understanding of the unskilled workers, who had never before worked with gabions, but also by the common system of giving daily tasks to the work force. Tasks often encourage speeding up of construction works, but this should never lead to sacrifice of quality. After explanations and some training this process was greatly improved and placing the gabion baskets could start in earnest. The following important construction points were stressed during training:

- proper wiring of lids and adjacent boxes,
- correct size of fill material; stones should especially have level surfaces,
- stones should be placed with the level surfaces on top (like a brickwall),
- stones should always be larger than the grid of the basket,
- the basket should be filled completely,
- bracing wires should be fixed once the basket is 1/3 and 2/3 full, and
- a carefully filled basket should leave the box intact.

After this training a group of 10 labourers was initially supervised by one foreman. This guaranteed that gabions were filled properly, wires were tied well and baskets properly connected to each other. The target was 3 gabions of 4 x 1 x 1 cubic metres per day. Work had to progress row after row. First of all a row of gabions, which was part of the apron base layer, was placed adjacent to the existing weir. Immediately after preparing the base layer as explained above, it was weighed down by placing the gabions. The procedure followed was to fill the target number of 3 baskets simultaneously. The plastic membrane that was needed for the overlap and the sealing of the upstream face of the gabion weir was covered with empty grain bags and some soil. This protected the plastic material against exposure to the sun and against other damage.

After a second row of gabions was placed, using the first row as a platform, the dewatering system was installed that would lead all seepage water across the construction site. The concrete pipes were placed on a grouted layer on top of the base layer of the gabion apron, near the existing concrete weir and apron (Plate A1.2). A cutoff wall was made at the upstream end of the pipe.

PLATE A1.2
Gabion apron under construction with the dewatering arrangement

At the same time the foundation for the upstream brickwall was constructed up to the level of the dewatering pipe. After completion of this dewatering arrangement the temporary diversion drain was closed. The remaining part of the construction pit could be excavated, using the dragline and manual labour. All in all 7,000 cubic metres of soil were moved from the construction pit and surrounding areas. After that, the base of the apron was completed, using the same construction procedure as for the first rows of gabions. After completion of the apron, work became much easier. The layers of gabions of the weir and the abutment were raised simultaneously. Work progressed at a pace of approximately 25 cubic metres per day. The layer immediately above the apron was crossed by the dewatering arrangement. The open space between the pipe and the gabions was filled with small stones and concrete.

The foundation of the upstream brickwall was also casted under muddy conditions. Shutters were used to block the inflow of muddy soil, after which the foundation was casted successfully. The gabion weir and abutment and the brickwall were constructed up to the right levels routinely, without problems.

The original design did not specify a particular cover of the brickwall and a connection with the gabion baskets (see the typical cross-section in Figure A1.7). However, a good shape and bond between the brickwall and the gabion structure, especially at the crest, was thought to be necessary. Pieces of damaged gabion baskets were used as reinforcement mesh. The wire mesh was tied to the gabions and a layer of concrete was poured on top of the crest. This concrete was finished with mortar, which was floated so as to get a smooth and rounded surface (see Figure A1.7).

FIGURE A1.7
Detail of finish of gabion weir crest

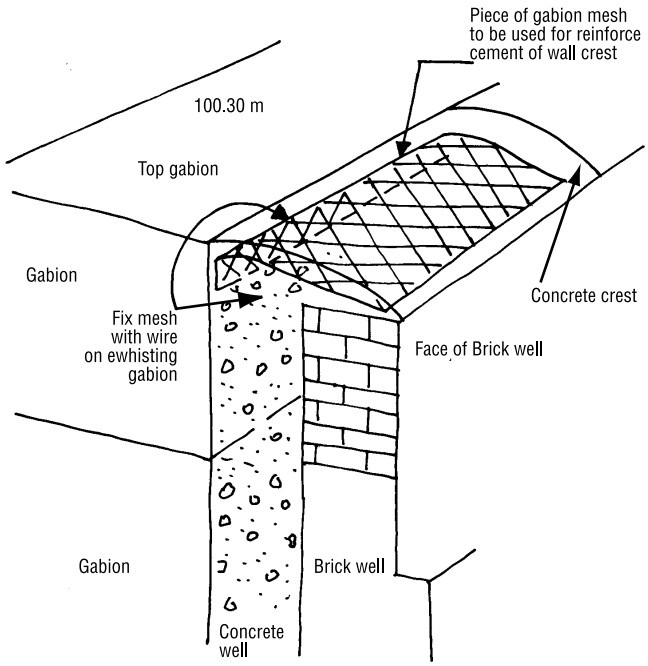

The right bank earth embankment and its link with the gabion abutment was constructed according to the proposed design. Construction was done by bulldozer, excavator and 2 tippers. Use was made of dense clayey soil that still kept sufficient moisture to achieve a good density of the embankment. Compaction of the 0.20 to 0.30 metre thick layers of soil took place with the bulldozer, except for the area near the abutment gabions, where compaction was done manually. An extra fill of 0.20 metre above the design crest elevation was placed to allow for settlement and consolidation. For the top layer of the embankment a soil suitable for grass cover was placed. This grass was planted to avoid erosion during the initial stages after construction. The most exposed upstream end of the embankment was protected with a handpacked rip-rap layer of 0.50 metre thickness, with stones of 0.20 to 0.30 metre diameter.

The final construction aspect was the proper sealing of the upstream river bed. With the experience gained during the previous construction phases, it was decided to change from a clay layer to an impermeable plastic layer covered with approximately 1 metre of soil that was excavated from the construction pit. The final and most difficult part to seal off was the dewatering inlet, which had to be kept working until the last moment of the entire venture. A few hours before the final closure of the dewatering pipe the radial gate of the spillway was lifted in order to reduce the water level in the river and thus the amount of seepage through the old diagonal weir. The entrance of the ditch was closed with soil filled grain bags and supported with soil that was pushed against the bags. Than the entrance to the pipe was also closed with bags and soil and concrete was poured in the pipe inlet.

EVALUATION AND CONCLUSIONS

Hara gabion weir was completed successfully within one dry season. Despite difficulties experienced during construction leading to frequent changes in design, the structure was completed with less than 6 percent cost overrun. The total construction costs were about $110 000, with the following breakdown in percentage of total costs:

• Wages	15 percent
• Plant and vehicles	
- fuel, etc	36 percent
- spares	3.5 percent
• Materials	
- cement	16 percent
- gabions	20 percent
- misc. materials (bricks, mesh, bags, timber, plastic and filter membranes.	6.5 percent
• Implements (hoes, shovels, wheel barrows, carpenter implements, etc.)	3 percent

This case study shows that gabions can be used for complicated works and under difficult working conditions. Manual labour was used to the largest extend possible. Mechanization was used intermittently, mainly for loading and transport of materials, clearing, excavation works and mixing concrete. The completed weir has now been in operation for more than 15 years. Where all previous, much more expensive, designs failed during a similar period, the gabion weir has been stable and has so far served its purpose well (Figure A1.3).

Plate A1.3
Completed Hara headworks

Annex 2

Torrent control weirs in Haiti

Present situation

The rapid deforestation of watersheds in Haiti during past decades is a real threat to the national economy and particularly to agriculture. The flooding of agricultural fields is becoming ever more frequent and violent, resulting both in the erosion of arable land, and in the deposition of sterile layers of sand and gravel on cultivated land. Take-off and regulation structures for irrigation that were designed and built at the time of a moderate hydrological regime are being damaged and swept away as they are no longer resistant to ever more violent torrential rains and runoff.

In order to reverse this situation, very substantial works concerning watershed management, soil conservation and reforestation are to be undertaken without delay. However, full-scale protection works depend, on one hand, on the availability of substantial financial resources and very important human skills and efforts. Furthermore, many years are necessary before results become evident.

However, it is possible to obtain about 30% to 50% of the potential rehabilitation effects with investments of the order of only 10% to 30% of the investments that would be necessary for full-scale protection works: this concerns the construction of carefully sited special hydraulic structures called torrent control weirs, .

To this end, UNDP/UNCDF-funded and FAO-executed projects have established a series of works concerning the training of the Ravine Durée watershed covering approx. 60 km^2, located in the District of Gonaïves in Haiti.

These works are designed to:

- lessen the violence of the incoming floods and their damaging effects on the irrigated perimeter of the Plaine des Gonaïves producing three crops a year, covering 2750 ha, situated at the outlet of the Ravine Durée;
- slow down the runoff flow and thus increase infiltration into the soil in order to increase discharge under low flow conditions, and to increase the duration of surface water use;
- improve the recharge of the Plaine des Gonaïves aquifer in order to make fully operational the irrigated scheme supplied from the 39 existing boreholes equipped with submersible pumps.

Groundwater is used for irrigation during the dry season, and for supplementary irrigation during the whole year. To this scope, it is necessary to abstract an average of 30 Mm^3 per year out of the aquifer. Even with the present consumption of about 20 Mm^3 per year, the water table tends to go down, and it becomes increasingly necessary to envisage artificial replenishment of the aquifer.

Proposal for remedial actions

For budgetary reasons, the proposed works concerned only the torrential stream beds, excluding measures for soil conservation in the upstream watershed. The proposed works were to be executed with simple tools and unskilled workers under a food for work scheme funded by the World Food Programme (WFP).

Before deciding on an action plan, a detailed survey of the area was carried out. In addition to morphological characteristics and the overall aspect of the torrential stream beds, a careful examination of previous interventions and structures concerning their present state and past behaviour was carried out. The empirical result of these examinations are as follows:

- the slope of the deposited alluvium, upstream of a weir is approximately equal to one half of the original slope of the torrential stream bed;
- the depth of the undermining pit downstream of the weir is equal to half the falling height before undermining;
- the length of the undermining pit is equal to twice the falling height before undermining;
- weirs which are not sufficiently anchored are destroyed;

Serious signs of erosion were noted on certain sections of the torrential stream, whereas other reaches did not show any such signs of erosion. This feature, which is partly due to the geological variety of the watershed, has been taken into consideration for the selection of the zones of intervention.

No works have been envisaged in the upstream section of the ravine for the following reasons:

- the very steep slope and the important peak discharge at an estimated speed of 4-8 m/s would result in very significant and expensive works;
- the bed is stabilized by large natural rocks fallen from the side slopes (over 1 m^3), and by some natural rocky weirs at shallow depth,
- There are no works planned either in the downstream section of the torrential stream as:
- the major bed which is deeply incised into alluvial deposits is farmed;
- the minor bed is stable;
- the aquifer is at the surface and therefore cannot be further replenished.

There remains an intermediary 900 m-long reach with an altitude difference of approx. 40 m. This section of the torrential stream which is suited for the construction of control weirs has been selected for the following reasons:

- the torrential stream discharges from the mountainous zone and then flows in an alluvial valley composed of very permeable stony deposits;
- the aquifer is deep and can be replenished;
- the major bed is not used for agriculture, and the minor bed is used as a sand quarry (hence the chaotic look of the length profile). This quarrying activities do not constitute inconveniences for the works to be undertaken (Fig. A2.1)

The proposed weirs would be designed to:

- reduce the solid discharge of the bed load
- replenish the aquifer by increasing infiltration;
- lessen the flood peaks by slowing down the speed of the water flow.

The average slope of the channel is about 4.4%. Building thirteen 2-metre high weirs, placed at 75 m intervals would reduce the slope to about 1.6%. With an average bed width of 8 m, the volume of the sediments to be trapped will average 9000 m^3.

FIGURE A2.1
Schematic geological profile

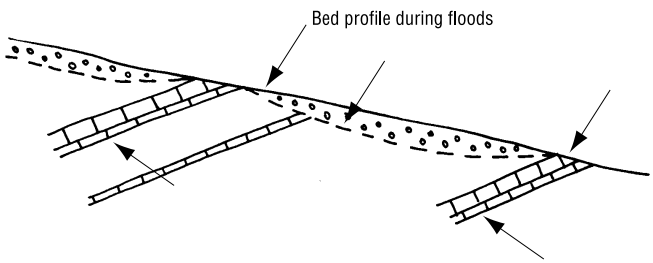

As the slope is halved, the water velocity is slowed down by approx. 30%, correspondingly the infiltrated water volumes will therefore increase by approximately 30%. In allowing an infiltrated depth of 50 mm per heavy rainfall event in this channel, this would make up for an extra volume of about 120000 m^3 per year, which would be temporarily stored in the alluvium. This volume of water is equivalent to a depth of 20 cm spread over the entire area of the Gonaïve Valley. If the porosity of alluvium is of the order of 10%, the aquifer level would rise by at least 2 metres. On the other hand, the sediment deposits would fill the basins created between the series of consecutive weirs within a period of approx.10 years, thus creating additional volume of sediment for storing water.

The project had to employ a maximum of unskilled labour; this is why the weirs were built entirely in gabions. Indeed, stone is plentiful, with an average diameter of 5 cm, with a proportion of at least 10% of a diameter over 20 cm. In addition, the hand made gabion baskets can be easily brought to the site as there is a dirt road nearby. The slightly stony (hard) water is not aggressive.

DESIGN AND SIZING OF THE GABION WEIRS

The gabion structures, which are not absolutely rigid, adapt to slight foundation settlements, and can sustain limited alterations concerning shape and lay-out. Therefore, formulas or analytical methods for calculating and sizing gabion structures are not very rigorous and recommendations based on experience and empirical rules need also to be applied (Fig. A2.2).

FIGURE A2.2
Typical design of torrent control weirs

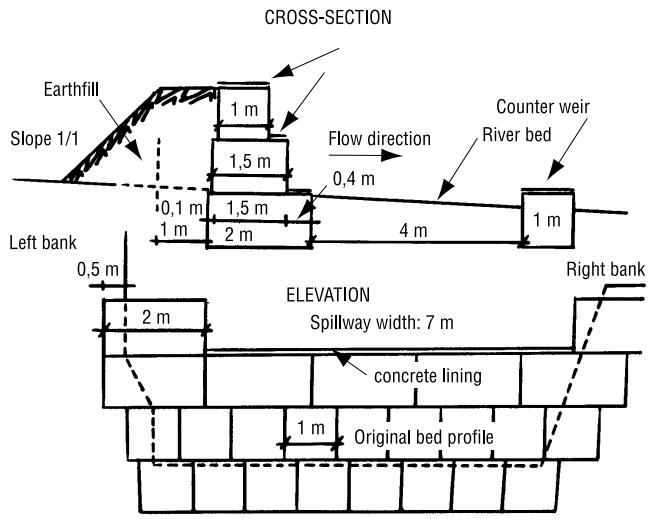

If gabion weirs are considered as retaining walls, existing formulas can be used for their design, to prevent overturning and sliding, taking into account the pressure of the alluvial soil stored behind the weirs. It is important to point out that this pressure can vary a lot, depending on the grain-size distribution of the material (sand, gravel, rocks), on the density of these materials

and on the pore-water pressure (Chapter 5). However, in most cases, calculation can be substituted by practical rules: the cross-section of low height weirs (h = 3-4 m), strong enough to resist any usual pressure has a top width of 1 m and a downstream face slope of 1/5.

In practice, the dimensions of the gabion baskets are standardised and their length varies by increments of 0.50 m. Then, the empirical profile (a) would be shaped as (b): (Fig. A2.3)

FIGURE A2.3
Empirically determined and actual cross-sections of a weir

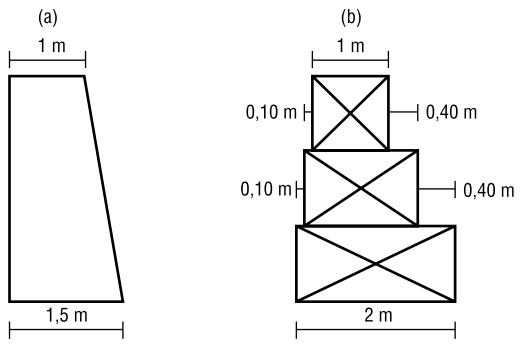

However, three further factors are important and may be decisive for the stability of weirs constructed across torrential streams:

- the resistance against the dynamic force of the incoming flash flood, which carries an enormous mass of water and solid elements in suspension. This tidal wave can easily loosen and destroy the gabions constituting the weirs;
- concentrated infiltrations creating piping effects by seepage are very dangerous if they occur under the foundations, which generally comprise alluvium. Danger can occur mainly during the construction phase and in the period immediately after commissioning of the weirs, as the gabions are not yet filled with alluvial sediments;
- the undermining of the weirs from downstream as the result of the scour deepening of the hole in the bed created by the force of the waterfall, and forming a dissipation basin.

If the above-mentioned phenomenon is fully taken into account in the design of the weirs in order to insure full guaranteed stability, this would lead to too expensive solutions, often incompatible with the nature of the works and the availability of funds: their productive effect being indirect and not immediate, generally, very limited resources are allocated by development projects for this kind of works. For these reasons, a lighter solution has been designed and constructed after careful analysis and studying various alternative solutions. As the selected solution includes some risks of structural damage, it is necessary to make sufficient provisions for repairs from the beginning: this would finally result in a much cheaper solution for the same purpose.

It is important to point out that this compromise between full stability safety and the lowest possible costs imperatively calls for special measures such as complementary works which lessen the instability effects described above. These measures are as follows:

- To reduce the dynamic impact of incoming floods, immediate construction of earth filling up to the level of the crest, upstream of the weirs is necessary;
- The space between the foundation excavation and the gabion baskets is subject to concentrated infiltrations and piping and a graded sand and gravel filter should be interposed between the foundations and the gabions (Chapter 5);
- Placing gabion mattresses downstream of the weirs where water falls and where the gabion foundation rests directly on the alluvium. This particularly concerns the wings of the weir;

- Placing gabion mattresses on the bottom of the energy dissipation basin downstream of the weir crest (figure 2.4a);
- Widening the overflow crest in order to reduce the discharge and thus its strength per unit width;
- Modifying the shape of the foundation in order to protect the toe of the gabion base which allows the torrential stream to dig a natural energy dissipation basin further downstream, without risks for the gabion structure. (Fig. A2.4b):

FIGURE A2.4
Modified foundations

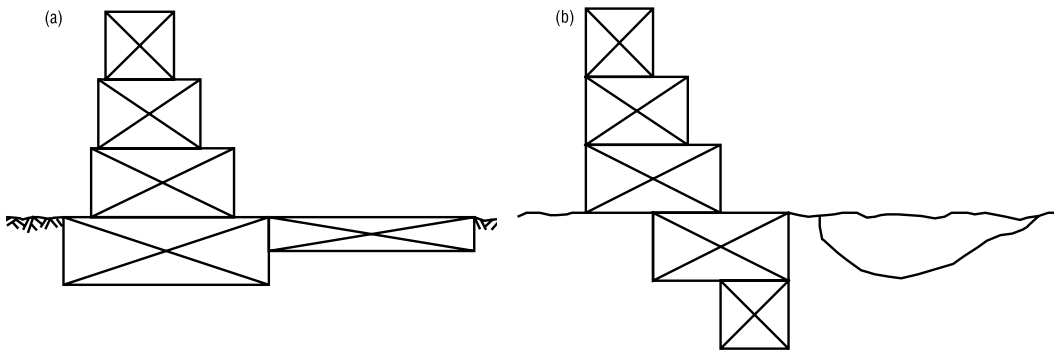

WORKS ORGANIZATION AND CONSTRUCTION

The main part of the works had to take place during the dry season. A topographical team undertook the necessary surveys to determine the best site for placing the weirs and the plans drawn up.

The following works were achieved by 10 teams of 100 men and women workers:

1. Manual transport of stones to fill the gabions, distance not exceeding 100 m:	1470 m^3
2. Foundation excavations (partially rocky) at the extremities of the weirs for the imbedding of the weir wings	375 m^3
3. Placing of gabions	1230 m^3
4. Masonry on foundations and wings	135 m^3
5. Concrete lining	28 m^3

DAMAGE SUFFERED AND REMEDIAL SOLUTIONS

Some damage to the gabion structures were noticed during and after completion of the works. The reasons for the damage are the following:

- full attention was paid to the siting of the gabions. However, proper filling of the spaces left between the excavations for the foundations into the alluvium, the earth fill upstream of the weirs and the gabions were somewhat neglected. This resulted in the destruction of some parts of the weirs, the undermining of the foundations, and the distortion of some weirs;
- the under-estimation of the incoming floods and, consequently the undersizing of the flood spillways. This was due to unsuitable hydrological data and the responsibility to estimate the

'project' flood: an overestimate would result in an increase of the works costs, and, an underestimate will result in damages and repairs or even complete destruction of the newly built structures;

- undermining downstream of the weirs has uncovered the foundations of certain parts of the weirs, generally outside the central spillway. The consequences of the damage have remained relatively minor, thanks to immediate measures taken by the team responsible for the follow-up and repairs;
- some damage caused by accepted risks taken into account during the design stage have resulted, in most cases, in the distortion of certain parts of the weirs and some downstream undermining. These are easily repaired if the necessary measures are taken immediately .

Through the follow-up programme, it was possible to observe the behaviour of the structures in place, and, if necessary, to undertake the required repairs immediately, thus preventing further deterioration. After 4 to 5 operating years, the gabions have consolidated, and have settled into place, and are protected upstream by the accumulation of alluvium. The occurrence of additional damage or dislocation becomes increasingly unlikely as time goes by.

Conclusions

Damage to structures happened, mostly, within the first 2 to 3 years after construction. A large proportion of these damages could have been avoided, if technical specifications had been carefully observed.

The estimated costs of the repairs were about 12 % of the initial total.

Altogether, the cost of the repairs undertaken justifies the light approach and conception. A heavy solution would have cost at least twice as much at the start, still not fully guaranteeing avoidance of the above-mentioned damage.

Many of the weirs filled with alluvium, much earlier than expected. The alluvial terraces formed behind the weirs were immediately colonized for agricultural production.

The ravine Sedren, which used to dry up only a few hours after flooding has now several natural water sources for domestic use and for watering the cattle during an important part of the year. The sediment discharge trapped during the floods has sensibly increased.

An unforeseen beneficial side-effect has been noted: the residents dig the accumulated sediment material behind the weirs, as sand and gravel quarries, thus ensuring some new income. At the same time, they liberate space for the deposition of new alluvial sediments.

It is important for this kind of development that the local population assumes full participation from the start of the project until the follow-up period: early detection of possible damages which occur after floods can be quickly repaired, thus preventing further deteriorations.

PLATE A2.1
The weir wings are deeply imbedded into the river banks

PLATE A2.2
Natural hole for energy dissipation beyond the toe of the weir foundations

PLATE A2.3
Spillway of a check dam

Annex 3

Hand made gabion baskets

Materials

Gabion baskets can be made manually. The wire used for making the gabion basket should be ø 3 mm zinc-coated iron wire. It is the maximum diameter allowing easy manual handling, while at the same time ensuring a high resistance of the gabion mesh to external stresses.

The necessary equipment and tools required for gabion manufacturing consists of:

Figure A3.1
Gabion mesh loom

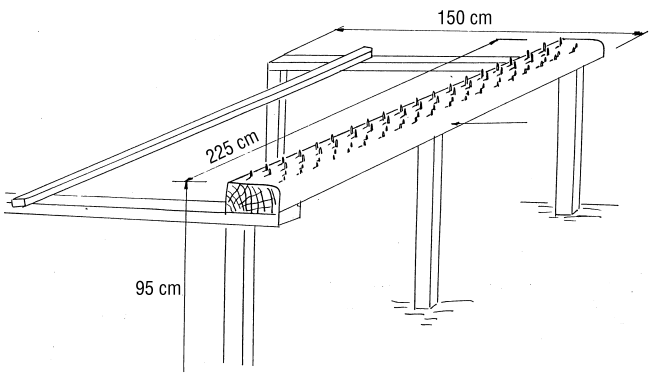

- gabion mesh loom which can be made locally without difficulty using wooden or steel beams according to the designs of fig. A3.1 and A3.2. The loom must be equipped with a number of iron pins for holding the mesh while the wire is being formed and twisted (see figure A3.7).

The manufacture of gabion baskets is described and illustrated step by step below:

Figure A3.2
Gabion mesh loom, plan

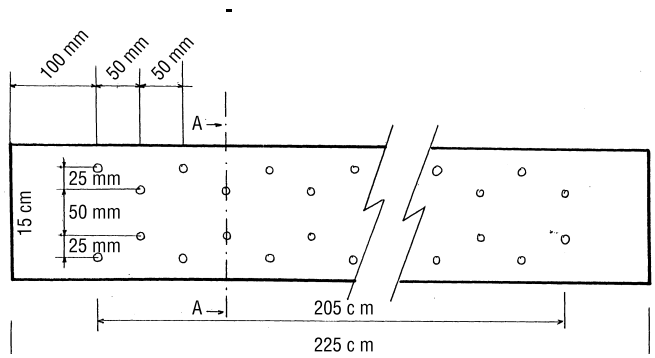

- the pieces of wire necessary for the length of the gabion have to be stretched out and cut to the desired length, depending on the characteristics of the mesh to be produced, as illustrated in plate A3.1

- the wires have to be arranged in pairs with the utilization of bench vice and tongs as shown in plate A3.2

PLATE A3.1
Wires cutting

- the wire pairs are positioned on the gabion mesh loom, as shown in plate A3.3.

- wires must be double twisted according to the dimensions imposed by the pins fixed on the gabion mesh loom, as shown in plate A3.4. When a new line of mesh is completed, the iron/wooden bar has to be removed and the loom has to be shifted back,

PLATE A3.2
Pairs of wires twisted together

PLATE A3.3
Pairs of wires disposed on the loom

- when the mesh has reached the required length, then the excess lengths of wire have to be cut and the mesh can be removed from the loom as shown in plate A3.5. Plate A3.6 shows a completed mesh to be used as the main component of a gabion basket. Then, lateral panels have to be made according to the same procedure.

- finally, the gabion basket is completed by assembling the mesh prepared for the main part with the two lateral panels around a piece of straight wire to form the selvedge, as shown in fig. A3.3.

Unskilled workers having received a basic training are able to carry out easily all phases of gabion manufacture. At least two workers are required at each loom for twisting and forming the mesh. The amount of gabion baskets that can be produced daily depends obviously on the number of workers at each loom and on their ability. As an average, two skilled workers can produce two 2x1x1 gabion baskets per working day.

The quantity of zinc-coated wire necessary for manufacturing is about a 2x1x1 gabion basket is of the order of 17 kg of ø 3 mm wire. Plate A3.7 shows a typical workshop setting with looms, stocks of wire, prepared mesh, and completed folded gabion baskets.

PLATE A3.4
The upper, middle and lower reaches of a river course

PLATE A3.5
Completed mesh removed from the loom

PLATE A3.6
Completed mesh

FIGURE A3.3
Assembling of the external panels

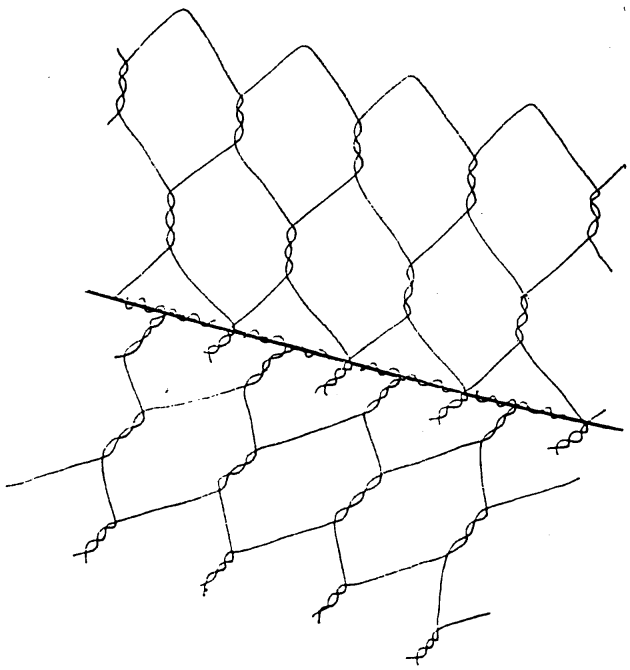

PLATE A3.7
Gabion manufacture workshop