Food and Agriculture Organization of the United Nations

Computer-based food composition database management system and interchange

Last update : January 2021

U. Ruth Charrondiere, PhD

FAO

Food and Agriculture Organization of the United Nations

Interchange of food composition data needs

- Electronic tool for data compilation, e.g. food composition database management system (FCDBMS)
- Motivated people
- Standard procedures, hopefully in line with international guidelines
- Integrated in international network

And if possible

- Steering committee between users, stakeholders and compilers
- Government support
- Funding for data generation, compilation and dissemination

Food and Agriculture Organization of the United Nations

Food composition programme

- Get food composition work institutionalized (authority from government)
- Get budget and time to do the work
- Get training and continue training through reading, doing, interchange of information and networking
- Do advocacy of your work
  - National and international conferences
  - Potential donors and collaborators incl. industry
- Publish your data
  - peer reviewed journals
  - national or regional tables and databases

Food and Agriculture Organization of the United Nations

Journal of Food Composition and Analysis

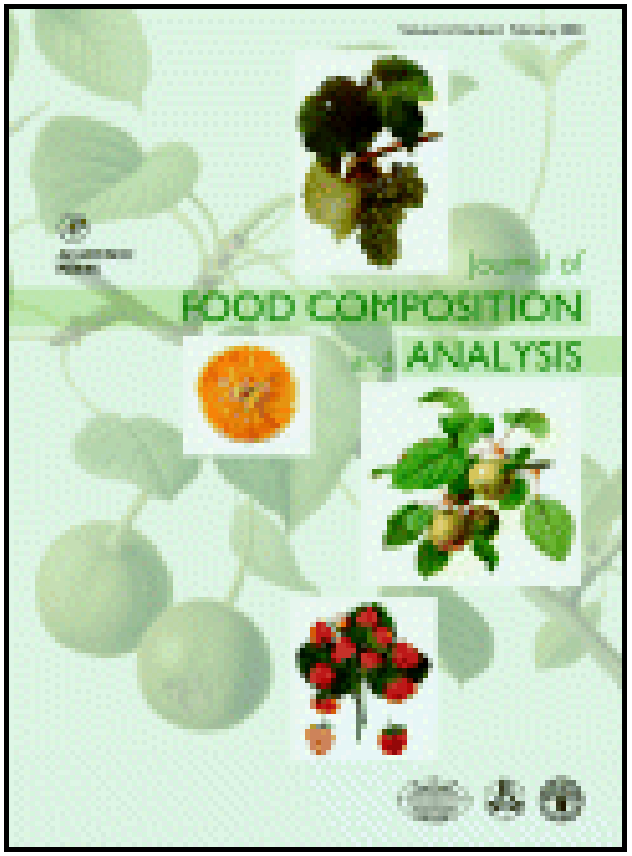

This journal is devoted to all scientific aspects of the chemical composition of human foods, and emphasizes new methods of analysis; biodiversity; data on composition of foods; studies on the manipulation, storage, distribution, and use of food composition data; and studies on the statistics and distribution of such data and data systems.

Food and Agriculture Organization of the United Nations

Regional Tables

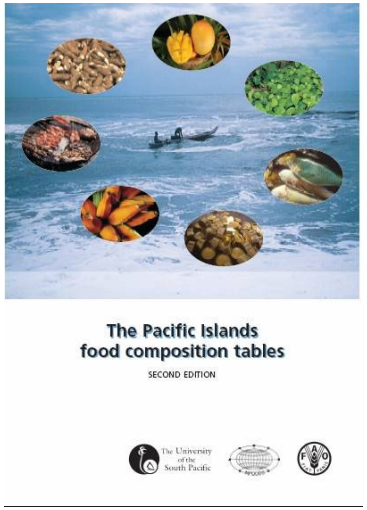

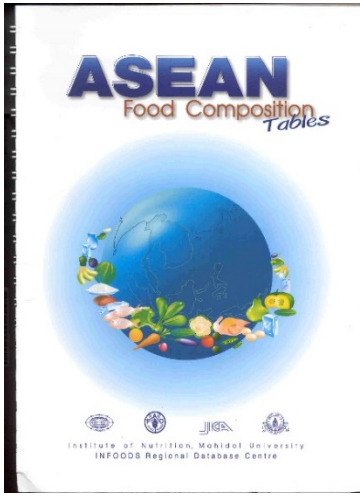

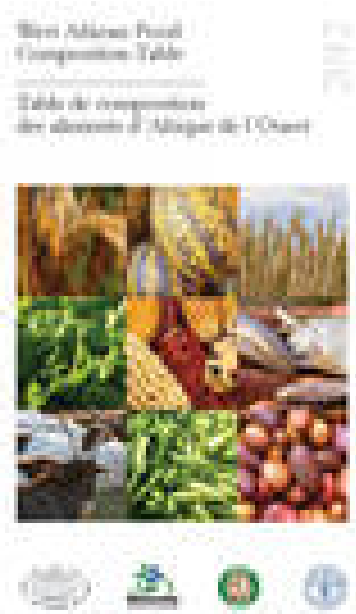

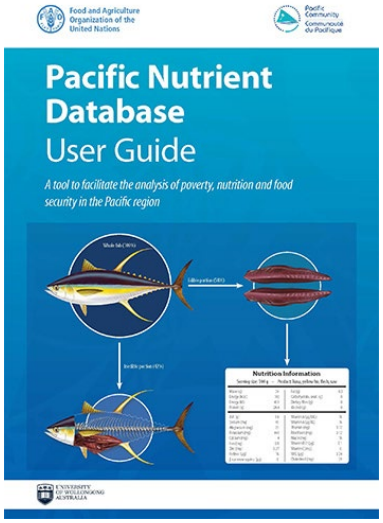

Food and Agriculture Organization of the United Nations

www.fao.org/infoods

Food and Agriculture Organization of the United Nations

Data Generation principles

- Generation of NVs starting for major foods in the food supply and for nutrients contributing most to nutrient intake
  → selection of main foods and key food approach to select nutrients to be analysed
- Good sampling plan
- Select GLP laboratory proving to
  - use appropriate analytical methods
  - perform method well
  - uses quality assurance principles, ideally be accreditated for the method and matrix
  - ideally be accreditated for the method AND matrix

→ if not done obtain NVs of low quality (with random and/or systematic errror) = waste of budget

Food and Agriculture Organization of the United Nations

Principles of compilation

GCP Good compilation practices

- Develop standard criteria for data evaluation and for inclusion of data into DB
- Use FCDBMS
- Document all data
- Use international standards, incl. for data evaluation
- Broad coverage of foods and components
- Unambiguous identification of foods and components
- Be systematic and able to explain your data and data choice

Food and Agriculture Organization of the United Nations

Documentation and interchange

Only data (with their metadata) in a database can be easily interchanged

Food and Agriculture Organization of the United Nations

Importance of Data Documentation

Needed to:

- qualify data
- evaluate data
- standardise / harmonise data
- interchange data

Food and Agriculture Organization of the United Nations

What kind of data documentation?

Quality Indicators:

- Sampling Plan
- Sample Handling
- No of Samples/Standard Deviation
- Analytical Method
- Analytical Quality Control
- Food identification
- Component identification

• Data Type/ Source Code

Food and Agriculture Organization of the United Nations

Documentation

- a must for newly analyzed data
- possible for assembled data
- often impossible for historic data

➔ documentation is essential for data quality and data evaluation

Food and Agriculture Organization
of the United Nations

ER diagram

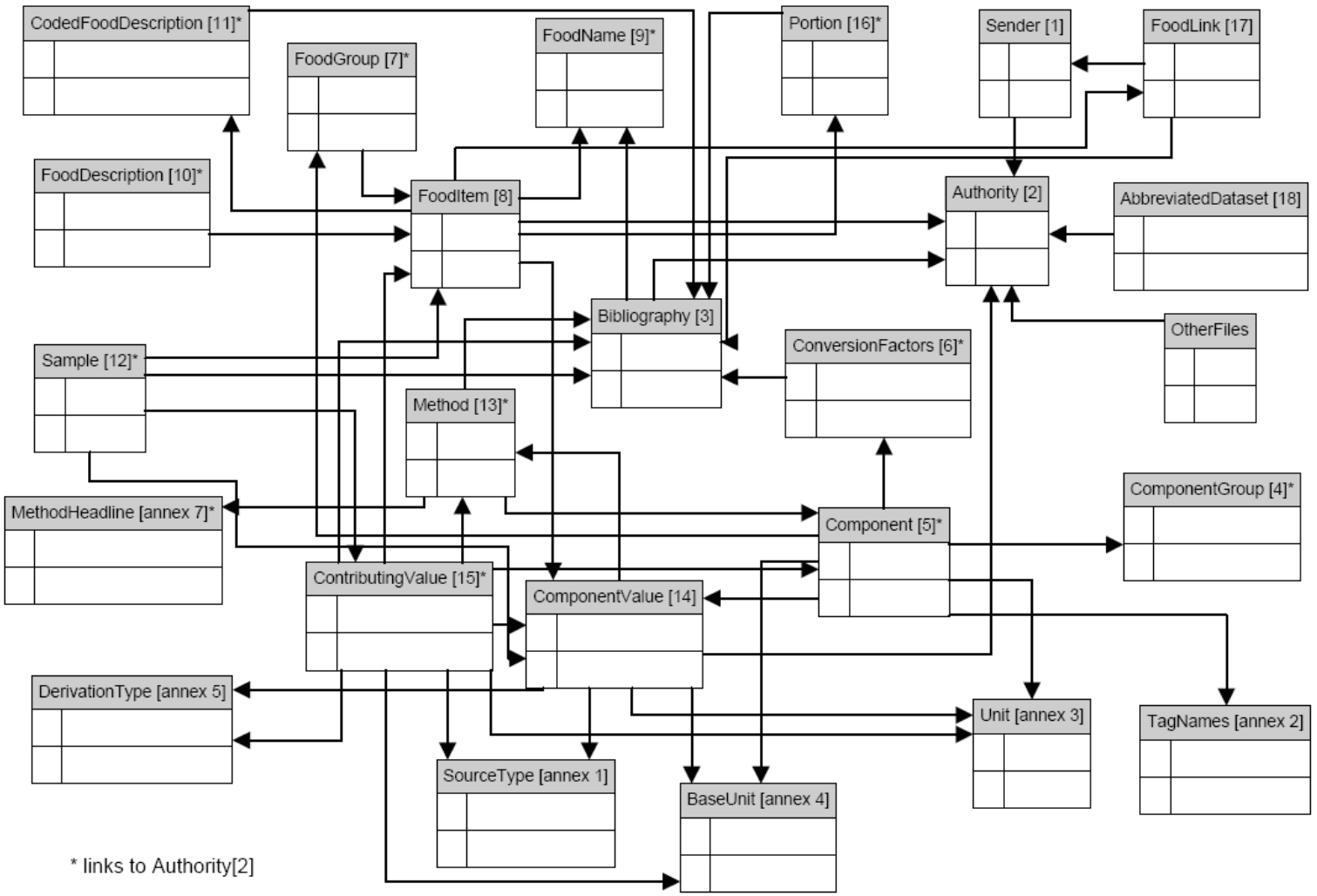

* links to Authority[2]

Food and Agriculture Organization
of the United Nations

INFOODS Food Composition Data Interchange Handbook

JOHN C. KLENSIN

The United Nations University, 1992

https://archive.unu.edu/unupress/unupbooks/80774e/80774E00.htm

Principles of interchange (1)

- Easy and unambiguous data transfer
- Preserve whatever information actually is available
- Be "extensible"
- Actual tables and databases cannot be expected to conform to a single standard or format, therefore interchange formats should have the ability to accommodate multiple coding, classification, and description systems

Principles of interchange (2)

- Permit interchange without loss of information
- Permit tracing the flow of values
- Encourage improvements in data quality, data description, and data definition
- Can be used between laboratory, compilers, and other users
- Best through XML

Implications for FCDBMS

- Interchange format gives an indication of detail and definitions of metadata which should be stored in the food composition database management system (FCDBMS).
- FCDBMS should also be constructed in a way to be able to import, export and manage the interchanged data.
- Able to read and generate SGML - XML

Food and Agriculture Organization of the United Nations

What is needed to interchange data?

- People interested in interchanging data
- Computerized data files, ideally FCDBMS
- Common format
- Common component identifiers
- Common vocabulary
- Free data interchange policies - copyright
- Collaboration with industry to obtain composition of brandname foods, including vitamin and mineral supplements

Food and Agriculture Organization of the United Nations

Interchange developments, applications and standards

- INFOODS Food Composition Data Interchange Handbook (1992)
- EUROFOODS/COST 99 Recommendations for Data Interchange (2000)
- ALIMENTA interchange of data (2000?)
- FAO Technical Workshop on Standards for Food Composition Data Interchange, Rome, 2004
- EuroFIR Food Data Transport Package (2005)
- EPIC Nutrient Database (ENDB) 2007 https://pubmed.ncbi.nlm.nih.gov/17375121/
- Pakkala, H., Martínez de Victoria, I., Christensen, T., Unwin, I., Korhonen, T., Gunnarsson, I., Presser, K. (2012) EuroFIR web services – specification of request-response message exchange patterns, version 1.2, EuroFIR Technical Report 2.8
- For more information see http://www.fao.org/infoods/infoods/standards-guidelines/international-interchange/en/ and http://toolbox.foodcomp.info/ToolBox_DataInterchange.asp

Food and Agriculture Organization of the United Nations

Proposed draft interchange format (FAO, 2004)

- FILE 0: SENDER (SENDER)
- FILE 1: AUTHORITY (AUTHORITY)
- FILE 2: BIBLIOGRAPHY (BIBLIO)
- FILE 3.0: COMPONENT GROUP (COMPGROUP)
- FILE 3: COMPONENTS (COMPONENT)
- FILE 3.1: CONVERSION FACTOR VALUES (FACTOR)
- FILE 4: FOOD GROUPS (FOODGROUP)
- FILE 5: FOOD ITEMS (FOODITEM)
- FILE 5.1: FOOD NAMES (FOODNAME)
- FILE 5.2: FOOD DESCRIPTION (FOODDESCR)
- FILE 5.2.1: CODED FOOD DESCRIPTION (CODEDESCR)
- FILE 6: SAMPLE (SAMPLE)
- FILE 7: METHOD (METHOD)
- FILE 8: COMPONENT VALUES (VALUE)
- FILE 9: CONTRIBUTING VALUES (CONTRIB)
- FILE 10: COMMON MEASUREMENT OR PORTION SIZE (PORTION)
- FILE 11: LINK BETWEEN FOOD CODES FROM DIFFERENT DATABASES/DATASETS (LINK)
- FILE 12: ABBREVIATED DATASET (ABBREVIATE)

Food and Agriculture Organization of the United Nations

Examples where interchange worked

- EPIC among partners (10 European partners)
- German BLS through BLS platform (especially with industry)
- Among EuroFIR partners

Interchange formats

- Electronic files, e.g. Excel files or other spreadsheets
- tab delimited txt files
- XML data files or equivalent

XML (Extensible Markup Language)

- Purpose
  - to aid information systems in sharing structured data, especially via the Internet
  - to encode documents
- Used in EuroFIR interchange

Terms used in XML

- **Start tag**: “Descriptive markup that identifies the start of an element and specifies its generic identifier and attributes.”
- **End tag**: “Descriptive markup that identifies the end of an element.” Start and end tags must have exactly the same name.
- **Content:** content is the data or information provided between start and end tag. It can be a text content or an element content – the latter is also called nested or child element.
- **Attribute:** A characteristic quality, other than type or content. An attribute is the information associated with an element. For example, if you think of an element as a noun, the attribute is an adjective. Attribute information for an element is stored in its start tag. An attribute consists of an attribute name and an attribute value. The attribute values are enclosed in quotes.
- **Nested element**: Also called child element. It is an element directly contained by another element; the first is said to be a child of the second.

Food and Agriculture Organization of the United Nations

Example

- <Component>
- - <ComponentIdentifiers>
- <ComponentIdentifier system="origcpcd">203</ComponentIdentifier>
- <ComponentIdentifier system="origcpnm">Protein</ComponentIdentifier>
- <ComponentIdentifier system="ecompid">PROT</ComponentIdentifier>
- <ComponentIdentifier system="INFOODS">PROCNT</ComponentIdentifier>
- </ComponentIdentifiers>
- - <Values>
- - <Value unit="g" matrixunit="W" methodtype="A" methodindicator="MI0123" methodparameter="6.38">
- <SelectedValue valuetype="MN" acquisitiontype="D">0.85</SelectedValue>
- <Mean>0.85</Mean>
- <StandardError>0.074</StandardError>
- <NumberOfAnalyticalPortions>16</NumberOfAnalyticalPortions>
- - <MethodSpecification>
- <MethodId>1</MethodId>
- <OfficialMethod>Jones (1941)</OfficialMethod>
- <GeneralDescription>The values for protein were calculated from the level of total nitrogen (N) in the food, using the conversion factors recommended by Jones (1941). The general factor of 6.25 is used to calculate protein in items that do not have a specific factor.</GeneralDescription>
- <Remarks>N x Jones factor</Remarks>
- </MethodSpecification>
- </Value>
- </Values>
- </Component>

For more on food composition, visit www.fao.org/infoods